NEW YORK STATE OF OPPORTUNITY

Department of Motor Vehicles

MOTOR VEHICLE INSPECTION REGULATIONS

Effective January 1, 2017

CONTENTS

Introduction iii
Division of Vehicle Safety Services Regional Offices iv
Division of Vehicle Safety Services Telephone Directory iv

REGULATIONS OF THE COMMISSIONER OF MOTOR VEHICLES
PART 79
MOTOR VEHICLE INSPECTION
(Statutory Authority: VTL Sections 215, 302, 303)

SECTION **PAGE**

79.1 Definitions (Amended 12/29/10 and 7/01/12) 1-4
79.2 Vehicles subject to inspection (Amended 12/29/10 and 7/01/12) 4-7
79.3 Schedule of inspection (Amended 7/01/12) 7
79.4 Inspection information (Amended 12/29/10 and 7/01/12) 7-8
79.5 Effect of certificate of inspection and effect of inspection rejection notice (Amended 12/29/10) 8
79.6 Inspection sticker fees 9
79.7 Official inspection station licenses (Amended 12/29/10, 7/13/11 and 7/01/12) 9-14
79.8 Duties of licensee (Amended 12/29/10) 14-16
79.9 Station requirements (Amended 12/29/10, 7/13/11, 7/01/12 and 01/01/17) 16-20
79.10 Certificates of inspection and inspection rejection notices: procurement, credit, refunds (Amended 12/29/10) 20
79.11 Issuance of certificates of inspection, issuance of inspection rejection notices, and replacements (Amended 7/01/12) 20-21
79.12 Required records (Amended 12/29/10 and 7/01/12) 22-23
79.13 Signs (Amended 12/29/10 and 7/01/12) 23-26
79.14 Penalties (Amended 7/01/12) 26-27
79.15 Official fleet and dealer inspection stations (Amended 12/29/10 and 7/01/12) 27-30
79.16 Repealed 12/29/10 30
79.17 Qualifications and duties of certified motor vehicle inspectors (Amended 12/29/10 and 7/01/12) 30-32
79.18 Reserved 32
79.19 Reserved 32
79.20 Inspection procedure generally (Amended 12/29/10, 2/23/11 and 7/01/12) 32-36
79.21 Inspection of motor vehicles (Amended 12/29/10, 7/01/12 and 01/01/17) 36-49
(a) Service brake system (Amended 7/01/12) 37-38
(b) Parking brake 38-39
(c) Tires 39-40
(d) Steering, suspension, front end and chassis/frame 40-42
(e) Lighting and reflectors 42-45
(f) Windshield and other glass (Amended 7/01/12 and 01/01/17) 45-46
(g) Mirrors 46-47
(h) Reserved 47
(i) Windshield wipers 47
(j) Horn 47
(k) Seat belts 48
(l) Fuel leaks 48-49
79.22 Light duty trailers 49
(a) Hitch system 49

CONTENTS (continued)

79.23 Medium duty vehicles 49-54
(a) Brake system 53
(b) Coupling devices 53-54
(c) Exhaust system 54
79.24 Emissions inspection procedure (Amended 12/29/10, 7/13/11 and 7/01/12) 55-61
(a) Applicability (Amended 12/29/10 and 7/01/12) 55
(b) Procedures (Amended 12/29/10 and 7/01/12) 55-56
(c) Repealed 12/29/10 56
(d) Standards (Amended 12/29/10 and 7/01/12) 56
(e) General provisions (Amended 12/29/10) 56-57
(f) Effect of failure of emissions inspection (Amended 12/29/10 and 7/01/12) 57
(g) OBD II and low enhanced emissions inspection, reinspection and fees 57-58
(h) Repealed 12/29/10 58
(i) Emissions control devices (Amended 12/29/10 and 7/01/12) 58-60
(j) Advisory emissions scan (Added 7/13/11) 61
79.25 OBD II emissions inspection waiver (Amended 12/29/10 and 7/01/12) 61
79.26 Vehicles subject to diesel emissions inspection (Amended 7/01/12) 62-64
79.27 Heavy vehicle inspection (Amended 12/29/10 and 01/01/17) 65-91
(a) Tires 65-66
(b) Wheels or rims 66
(c) Steering 66-67
(d) Front end 67-68
(e) Suspension 68-69
(f) Chassis/Frame 69
(g) Window glass (Amended 01/01/17) 69-70
(h) Windshield wipers 71
(i) Mirrors 71
(j) Horn 71
(k) Coupling devices 72-74
(l) Exhaust system 74-75
(m) Lighting and reflectors 75-78
(n) Service brake system 78-84
(o) Parking brake systems 85-86
(p) Seat belts 86
(q) Fuel Leaks 87
Appendix I: Cam Brakes — Push-Rod Travel Limits (TABLE A) 88
Appendix II: Disc Brakes — Push-Rod Travel Limits (TABLE B) 89
Appendix III: Measuring the Cam Brake Adjustment (FIGURE 1) 90
Appendix IV: Measuring the Wedge Brake Adjustment (FIGURE 2) 91
79.28 Inspection of motorcycles 92-95
(a) Brakes 92
(b) Steering suspension and frame 93
(c) Exhaust system and muffler 93
(d) Headlamp 93
(e) Other lights 94
(f) Tires 94-95
(g) Horn 95
(h) Rearview mirror 95
79.29 Appendix A 96
79.30 Repealed 97

INTRODUCTION

Article 5 of the Vehicle and Traffic Law provides for a system of inspection for all vehicles registered in New York State. Inspections are required at least once every 12 months and are performed by official inspection stations that are privately owned but licensed by the Department of Motor Vehicles. No motor vehicle required to be inspected may be registered or operated in this state unless it has been inspected in accordance with the provisions of these regulations, and displays a current certificate of inspection issued by an official inspection station.

This information has been prepared to provide official inspection stations with a guide for conducting inspections, completing forms, and sending records to the Department of Motor Vehicles.

Please note: The text in this document is not an exact duplicate of the official version of the Part 79 Regulation. DMV staff may change tabs/spacing or text for the reader's benefit. These changes do not change the meaning or intent of the Regulation as presented in this document in any way.

The text in this manual reflects the amendments to Part 79 that were effective on:

JANUARY 23, 2008 (NYVIP2)

SEPTEMBER 24, 2008 (NYTEST/Shared Network)

JUNE 23, 2010 (Civil Penalties)
DECEMBER 29, 2010 (State Implementation Plan - End of NYTEST Inspection Program)

FEBRUARY 23, 2011 (Stretch Limousines - NYSDOT Inspection)

JULY 13, 2011 (Cap on Inspection Stations & Advisory Emissions Scan)

JULY 1, 2012 (OBDII Emissions Inspections for Light-duty Diesel Powered Vehicles)

JUNE 19, 2013 (Provisional Inspection Station Licenses)

JANUARY 1, 2017 (Chapter 444 of the Laws of 2016)

For this and other business information and forms, visit:
dmv.ny.gov/forms.htm#business

DEPARTMENT OF MOTOR VEHICLES
DIVISION OF VEHICLE SAFETY SERVICES
REGIONAL OFFICES

REGION 1 - VEHICLE SAFETY
1800 OLD WALT WHITMAN ROAD
SUITE 150
MELVILLE, NEW YORK 11747
(631) 770-3003

REGION 2 - VEHICLE SAFETY
1 LARKIN PLAZA
YONKERS, NEW YORK 10701
(914) 965-7766

REGION 3 - VEHICLE SAFETY
175 SPARROWBUSH ROAD
LATHAM, NEW YORK 12110
(518) 783-7062

REGION 4 - VEHICLE SAFETY
5801 E. TAFT ROAD
NO. SYRACUSE, NEW YORK 13212
(315) 458-6683

REGION 5 - VEHICLE SAFETY
334 DINGENS STREET
BUFFALO, NEW YORK 14206
(716) 826-3187

REGION 6 - VEHICLE SAFETY
92-11 179th PLACE
JAMAICA, NEW YORK 11433
(718) 526-8546

DIVISION OF VEHICLE SAFETY SERVICES TELEPHONE DIRECTORY

Please refer to the following list of telephone numbers when contacting Vehicle Safety Services:

Inspection Stickers ..... (518) 474-2398
MV-50 Unit ..... (518) 474-2398
Inspection Station Applications ..... (518) 474-0919
Inspector Certification Unit ..... (518) 474-7998
Certified Inspector Applications ..... (518) 474-4653
Hearings ..... (518) 474-1510
Information Pertaining to Inspection Procedures and Regulations ..... (518) 474-5282
Complaints ..... (518) 474-8943
Supplies ..... (518) 474-3375

PART 79

MOTOR VEHICLE INSPECTION REGULATION

Published By

NEW YORK STATE DEPARTMENT OF MOTOR VEHICLES
OFFICE OF VEHICLE SAFETY & CLEAN AIR
6 Empire State Plaza, Room 220
Albany, New York 12228

ANDREW M. CUOMO
Governor

§ 79.1 Definitions.

For the purposes of this Part, the following terms shall have these meanings:

(a) *Certificate of inspection (form VS-1082, VS-1082HV, VS1082.1, VS-1082SE or VS-1082D).* A sticker, also referred to as an inspection certificate, secured from the Department of Motor Vehicles by an official inspection station, issued by such station and affixed to a vehicle as prescribed by these regulations to evidence the satisfactory completion of an inspection of that vehicle in compliance with article 5 of the Vehicle and Traffic Law and this Part. Such sticker, when properly issued, is valid until midnight on the last day of the month punched thereon, of the indicated year. (Amended 7/01/12)

(b) *Inspection Rejection/Advisory Notice (form VS-1075).* A form secured from the Department of Motor Vehicles and issued by an inspection station to a motorist as prescribed in this Part. An equivalent inspection rejection notice may also be printed by the computerized vehicle inspection system, without a form number. The certificate informs the motorist why the vehicle is being rejected and advises the motorist of deficiencies. A rejection notice is not an extension of an expired sticker, except as provided for in section 79.20(a) of this Part. (Amended 1/23/08)

(c) *Maximum Gross Weight (MGW*). The weight of a motor vehicle as shown on the vehicle's registration document or, in the case of truck or trailer, the weight of the vehicle plus the maximum load the vehicle is registered to carry as shown on the vehicle's registration document. The MGW, not the designed carrying capacity of the vehicle, will be the weight that is used to determine the appropriate safety inspection for the vehicle. (Amended 1/23/08)

(d) *Motor vehicle*. Every vehicle included in the definition of the term motor vehicle and motorcycle as set forth in sections 125 and 123 of the Vehicle and Traffic Law, and every vehicle included in the definition of the term limited use automobile or motorcycle as set forth in sections 121-a and 121-b of the Vehicle and Traffic Law, as well as all trailers, set forth in section 156, except those vehicles specifically set forth in section 79.2(d) of this Part. (Amended 9/2/98)

(e) *Motor vehicle inspection record (VS1074S, VS-1074SD, or VS-1074M).* A form secured from the Department of Motor Vehicles by an official inspection station. This form is used to record inspections, reinspections and the results thereof, and to record certificates of inspection, and inspection rejection notices issued but is not to be used to record information on inspections for vehicles subject to OBD II or low enhanced emissions inspection. (Amended 12/29/10)

(f) *Motor vehicle registered in this State*. Every vehicle included in the definition of the term motor vehicle as set forth in subdivision (d) of this section, for which a certificate of registration has been issued pursuant to sections 401, 410, or 420 of the Vehicle and Traffic Law or for which a nonresident seasonal farm laborer vehicle certificate has been issued pursuant to subdivision 4 of section 250 of the Vehicle and Traffic Law. A vehicle ceases to be a motor vehicle registered in this State at such time as the registration for such vehicle expires because of transfer of ownership or destruction of such vehicle. A motor vehicle owned or controlled by a dealer or transporter and legally being operated with dealer or transporter plates is not a motor vehicle registered in this State, and does not require inspection. (Amended 8/13/03)

(g) *Official safety inspection station*. Any person, association or corporation to which has been issued a license by the Commissioner of Motor Vehicles pursuant to section 303 of the Vehicle and Traffic Law, to conduct safety inspections of motor vehicles exempt from the emissions inspection requirement.

(h) *Official inspection station (fleet)*. Any person, association or corporation having more than 25 motor vehicles registered in its name which has been issued a license by the Commissioner of Motor Vehicles to conduct inspections of motor vehicles registered in its name or leased by it for a period greater than 30 days and motor vehicles owned by its employees; or any state agency or political subdivision having more than five motor vehicles registered in its name which has been issued a license by the Commissioner of Motor Vehicles to conduct inspections of motor vehicles registered in its name or leased by it for a period greater than 30 days and motor vehicles registered in the name of any state agency or political subdivision. (Amended 9/24/08)

(i) *Official inspection station (dealer)*. Any person, association or corporation registered as a dealer under section 415 of the Vehicle and Traffic Law, which has been issued a license by the Commissioner of Motor Vehicles to conduct inspection of motor vehicles held by such dealer for sale or demonstration, and motor vehicles owned by employees of such dealer. (Amended 8/13/03)

(j) *Ten-day time extension (form VS-1077)*. A sticker secured from the Department of Motor Vehicles and affixed to a motor vehicle to evidence that the time within which such motor vehicle must be inspected has been extended for a period not to exceed 10 days as stated on the certificate. (Amended 9/1/04)

(k) *Certified motor vehicle inspector*. A person who has been issued a certificate by the Commissioner of Motor Vehicles pursuant to section 304-a of the Vehicle and Traffic Law, authorizing him to conduct inspections of motor vehicles and/or motorcycles or trailers. (Amended 1/23/08)

(l) *Motor vehicle inspector's certificate.* A card issued by the Commissioner of Motor Vehicles to a person authorizing such person to conduct periodic inspections of motor vehicles and/or motorcycles and/or trailers. The certificates are categorized as follows: (Amended 7/01/12)

Group 1- allows an individual to conduct safety, diesel emissions, OBD II inspections, and low enhanced emissions inspections of motor vehicles that have a seating capacity, as indicated on the vehicle registration certificate, under fifteen passengers, and motor vehicles and trailers that have an MGW, as indicated on the vehicle registration certificate, under 18,001 pounds, except: motorcycles; those motor vehicles and trailers that have an MGW, as indicated on the vehicle registration certificate, over 10,000 pounds and under 18,001 pounds, when the registrant requests a heavy vehicle inspection; and semi-trailers. The ability to perform OBD II inspections may also be dependent upon passing the applicable test in the CVIS. (Amended 12/29/10)

Group 2 - allows an individual to conduct safety and diesel emissions inspections of motor vehicles that have a seating capacity, as indicated on the vehicle registration certificate, over fourteen passengers; motor vehicles and trailers that have an MGW, as indicated on the vehicle registration certificate, over 18,000 pounds; those motor vehicles and trailers that have an MGW, as indicated on the vehicle registration certificate, over 10,000 pounds and under 18,001 pounds, when the registrant requests a heavy vehicle inspection; and semi-trailers, except: motorcycles. (Amended 7/01/12)

Group 3 - allows an individual to conduct safety inspections of motorcycles.

(m) *New York Metropolitan Area (NYMA).* This region comprises the counties of Suffolk (except Fisher's Island), Nassau, Kings, Queens, Richmond, New York, Bronx, Westchester and Rockland. Diesel powered vehicles registered in this region that are subject to the diesel emissions inspection (smoke opacity test) will have DEMA printed on the registration. (Amended 7/01/12)

(n) *Repealed 12/29/10.*

(o) *Computerized vehicle inspection system (CVIS).* A CVIS is an inspection workstation consisting of all of the authorized and approved hardware and software components is used to produce an electronic vehicle inspection record for emissions and/or safety inspections. Such vehicle inspection record is transmitted electronically to DMV. (Amended 7/01/12)

(p) *Repealed 12/29/10.*

(q) *Official emissions inspection station*. Any person, association or corporation which has been issued a license to conduct safety inspections, OBD II inspections and low enhanced emissions inspections. (Amended 12/29/10)

(r) *Temporary certificate of emissions waiver (form VS-1078).* A certificate secured from the Department of Motor Vehicles by an owner of a motor vehicle and affixed to said motor vehicle with the valid New York State safety (form VS-1082) or heavy vehicle safety (form VS-1082HV) inspection sticker to evidence temporary waiver from the diesel emissions portion of the annual inspection. Form VS-1078 may not be used for a vehicle subject to the OBD II or low enhanced emissions inspection. (Amended 12/29/10)

(s) *Repealed 12/29/10.*

(t) *Inflatable restraint system*. An air bag as defined in 49 CFR Part 571.208 (S4.1.5.1) that is designed and installed to be activated in a crash.

(u) *Inflatable restraint readiness indicator light*. An indicator monitoring the inflatable restraint systems readiness. The light must be clearly visible from the driver's position. (Amended 5/4/05)

(v) *Diesel emissions inspection station*. Any person, association or corporation which has been issued a license to conduct both vehicle safety and diesel emissions inspection. (Added 12/22/99)

(w) *Diesel emissions inspection certification and waiver form (form VS-1079DE).* A form secured from the Department of Motor Vehicles, used by an official inspection station to certify that a vehicle subject to the diesel emissions inspection has qualified for and been issued a waiver per Department of Environmental Conservation standards. (Added 12/22/99)

(x) *On board diagnostics (OBD)*. A system, within passenger cars and light trucks in designated model year 1996 or newer, which monitors system degradation as it relates to powertrain components and emission control devices. (Added 8/13/03)

(y) *Malfunction Indicator lamp or light (MIL)*. The term used for the "Check Engine" or "Service Engine Soon" light, or any other indicator light with a similar name that performs the same

function. This light is evaluated when performing the OBD II emissions portion of an inspection. (Amended 9/1/04)

(z) *Repealed 12/29/10.*

(aa) *Repealed 12/29/10.*

§ 79.2 Vehicles subject to inspection.

(a) All motor vehicles registered in this State must be inspected in accordance with the provisions of this Part unless expressly excluded by subdivision (d) of this section (Amended 9/24/08).

(b) Except as provided in paragraph (3) of this subdivision, every motor vehicle (including a trailer, other than a mobile home trailer) sold or transferred for use on the public highways of this State by a dealer registered under Section 415 of the Vehicle and Traffic Law to any person other than another such registered dealer, must be inspected and bear a valid certificate of inspection prior to delivery to the purchaser or transferee. (Amended 9/1/04)

(1) For the purpose of this Part, motor vehicles classified as new vehicles, demonstrators, and used vehicles, are vehicles which are sold or transferred for use on the public highways of the State.

(2) For the purpose of this subdivision, a valid certificate of inspection shall be one which was issued after an inspection made within 30 days of the date of sale as indicated by the date of sale on the certificate of sale (form MV-50), and prior to delivery. (Amended 5/4/05)

(3) Registered dealers do not have to inspect vehicles classified on the certificate of sale, MV-50, as "chassis", "FDD" (factory direct delivery), "O of S" (out of state), "junk", "long term lessee" (lease buyout), or "wholesale." Such indication should appear in the inspection block on the MV-50. (Amended 9/24/08)

(4) A motor vehicle sold to a nonresident, which motor vehicle is to be immediately registered in the home state of such nonresident, shall not be deemed a motor vehicle sold or transferred for use on the public highways of the State and does not have to be inspected prior to sale.

(c) Every motor vehicle must be inspected and bear a valid certificate of inspection before an original registration, reregistration or renewal registration for that motor vehicle may be issued, however, an original registration or reregistration or renewal may be issued without an inspection having been made if the applicant for such registration obtains a 10-day time extension certificate (form VS-1077) for the motor vehicle which is to be registered. A vehicle sold as junk is not entitled to a 10-day time extension or a temporary registration and must be inspected before an original or reregistration is issued. Upon the casual (non-dealer) sale or transfer of a motor vehicle, any certificate of inspection issued prior to the date of the sale or transfer shall be deemed invalid. (Amended 1/23/08)

***Note*:** A motor vehicle may be inspected as often as the owner may choose, so long as said vehicle is inspected at least once in any given 12-month period.

(d) The following are excluded from the term "motor vehicle" for purposes of this section and need not be inspected: (Amended 5/21/03)

(1) fire vehicles, except ambulances;

(2) tractors used exclusively for agricultural purposes;

(3) vehicles inspected by or operating under a certificate of inspection authorized by the State Department of Transportation or the Federal Department of Transportation (operation under a certificate of operating authority issued by either agency, without an inspection having been made, does not constitute operating under such certificate of inspection); (Amended 9/1/04)

(4) vehicles with a MGW of more than 8500 pounds of a municipally owned and operated transit system; (Amended 8/13/03)

(5) farm vehicles registered under subdivision 13 of Section 401 of the Vehicle and Traffic Law. Farm vehicles are those operated upon a public highway connecting by the most direct route any farms or portions of a farm under single or common ownership or operation;

(6) vehicles subject to inspection and licensing by local authorities, provided such inspection by such local authorities conforms with the standards herein established by the Commissioner of Motor Vehicles;

(7) house trailers or mobile homes when sold for purposes other than registration and operation on the highways, until such time as these vehicles are to be registered for operation on the highways;

(8) vehicles not registered in this State;

(9) special purpose commercial vehicles including vehicles with "STATE" or "OFFICIAL" plates which would be registered as special purpose commercial vehicles if they were privately owned and registered. These special purpose commercial vehicles have the following body types: agricultural spreader or sprayer, earth mover, feed processing machine, fire vehicle, mobile car crushers, power shovel, road building machine, road roller, road sweeper, sand spreader, snow plow, tractor crane, truck crane, truck with small wheels (such as a forklift), well driller and well servicing rig; (Amended 12/22/99)

(10) golf carts and invalid chairs; (Added 9/2/98)

(11) snowmobiles and snow travelers; (Added 9/2/98)

(12) class B and class C limited use motorcycles; (Added 9/2/98)

(13) all-terrain vehicles (including off-highway motorcycles); (Added 9/2/98)

(14) low speed vehicles.

(e) *Reserved*.

(f) The following vehicles, which are subject to safety inspection, are exempt from the OBD II and low-enhanced emissions portion of that annual inspection: (Amended 12/29/10)

(1) vehicles 26 or more model years old; (Amended 3/24/99)

(2) electric vehicles; (Amended 7/01/12)

(3) motor vehicles propelled by a two-cycle spark ignition designed to burn a mixture of gasoline with oil;

(4) vehicles less than 2 model years old; (Amended 3/24/99)

(5) vehicles registered as historical vehicles; (Amended 3/24/99)

(6) motorcycles; (Amended 7/01/12)

(7) vehicles subject to the heavy vehicle safety inspection (motor vehicles that have a seating capacity, as indicated on the vehicle registration certificate, over fourteen passengers; motor vehicles that have an MGW, as indicated on the vehicle registration certificate, over 18,000 pounds; and those motor vehicles that have an MGW, as indicated on the vehicle registration certificate, over 10,000 pounds and under 18,001 pounds, when the registrant requests a heavy vehicle inspection); (Amended 12/29/10)

(8) diesel vehicles, except those diesel-powered vehicles that are model year 1997 or newer that have a gross vehicle weight rating (GVWR) under 8,501 pounds. (Amended 7/01/12)

(g) A vehicle registered with "OFFICIAL" plates or "STATE" plates shall be subject to the same inspection it would be subject to if it were privately owned and registered. (Amended 9/24/08)

(h) The following vehicles, which may be subject to safety inspection, and are registered in the NYMA, are exempt from the diesel emissions portion of that inspection: (Amended 8/13/03)

(1) emergency vehicles as defined by section 101 of the Vehicle and Traffic Law. These include: ambulances, police vehicles, correction vehicles, fire vehicles, civil defense emergency vehicles, emergency ambulance service vehicles, blood delivery vehicles, county emergency medical services vehicles, environmental emergency response vehicles, sanitation patrol vehicles, hazardous materials emergency vehicles, and ordnance disposal vehicles of the armed forces of the United States; (Amended 9/24/08)

(2) agricultural trucks as defined by section 401(7)(E)(2) of the Vehicle and Traffic Law; (Added 12/22/99)

(3) *Reserved 8/13/03.*

(4) vehicles registered as historic; (Added 12/22/99)

(5) special purpose commercial vehicles as set forth in Section 401(7)(F)(a) of the Vehicle and Traffic Law. (Note: Special purpose commercial vehicles are exempt from the safety inspection.) (Amended 9/24/08)

(6) *Repealed and Reserved 1/23/08.*

(i) Vehicles registered outside the NYMA are exempt from the diesel emissions inspection. However, an owner of a vehicle that would be subject to diesel emissions inspection if registered in the NYMA, may request a diesel emissions inspection when presenting the vehicle for inspection to an official diesel emissions inspection station. (Added 1/23/08)

§ 79.3 Schedule of inspection.

(a) Every motor vehicle and trailer registered in this State is required to be inspected prior to midnight on the last day of the month punched, of the indicated year, on the current inspection certificate. Upon the casual (non-dealer) sale or transfer of a motor vehicle, any certificate of inspection issued prior to the date of the sale or transfer shall be deemed invalid. Every motor vehicle and trailer must be inspected upon change of registrant. (Amended 7/01/12)

§ 79.4 Inspection information.

(a) Upon application to the commissioner, the owner of a motor vehicle required to be inspected may request an extension of time to have the inspection made. Such extension of time, not to exceed 10 days, may be granted by the commissioner if, in his discretion, reasonable grounds exist for its issuance. The extension must be affixed to the motor vehicle in the lower left corner of the inside of the windshield or kept with the vehicle registration if the vehicle has no windshield, or is a trailer or motorcycle. (Amended 8/13/03)

(b) Where a nonresident becomes a resident of this State, a certificate of inspection issued by any other jurisdiction to a motor vehicle owned by him will be accepted in lieu of a certificate of inspection issued in this State. Such a certificate will be valid until the expiration date of the out-of-state certificate, or one year from the date of New York registration, whichever occurs first. Upon expiration of the out-of-state certificate, the motor vehicle must be inspected and bear a certificate of inspection from an official New York inspection station.

(c) A certificate of inspection issued by any other jurisdiction which has a compulsory periodic inspection program to a motor vehicle which is concurrently registered (vehicle registered in more than one jurisdiction) in this State and in the state or province of Canada which issued the certificate of inspection will be accepted in lieu of a certificate of inspection issued in this State. Such a certificate will be valid until the expiration date of the out-of-state certificate, provided the motor vehicle remains registered in such other state or province of Canada. For purposes of this Part, a vehicle with an International Registration Plan registration will be deemed registered in every jurisdiction in which it may legally be operated.

(d) The owner of a motor vehicle that is registered in the NYMA and that is subject to a diesel emissions inspection, whose motor vehicle inspection certificate will expire while outside the NYMA or who purchases a vehicle from outside the NYMA, may apply to the commissioner for a temporary certificate of emissions waiver (form VS-1078) prior to receiving an inspection. The temporary certificate of emissions waiver will be valid with a valid New York State safety inspection certificate (form VS-1082) or heavy vehicle safety inspection certificate (form VS-1082HV) for as long as the registered vehicle is outside the NYMA. A diesel-powered motor vehicle that is registered in the NYMA and that is exempt from a diesel emissions inspection does not require a temporary waiver, may be inspected at any inspection station licensed to inspect such vehicles, and does not need to be reinspected upon return to the NYMA. (Amended 12/29/2010)

(1) (Repealed and reserved 7/01/12)

(2) A vehicle subject to the diesel emissions inspection that is presented for inspection with a VS-1078 outside the NYMA must receive the appropriate safety inspection and, when it passes said inspection, shall receive the appropriate safety inspection certificate. (Amended 9/1/04)

(3) The temporary certificate of emissions waiver will be valid for ten (10) days after entry into the NYMA by the motor vehicle. Upon re-entry to the NYMA, and prior to the expiration of the 10 days, the subject vehicle must receive the complete appropriate diesel emissions/safety inspection. (Amended 12/29/10)

(4) Vehicles that are subject to an OBD II inspection and registered in the NYMA, that are inspected outside the NYMA, shall receive a complete safety and OBD II inspection and when such a vehicle passes said inspection, shall receive a safety/emissions inspection certificate (form VS-1082SE). This certificate shall be valid in the NYMA; the vehicle does not require reinspection, and a VS-1078 is not required. (Amended 7/01/12)

§ 79.5 Effect of certificate of inspection and effect of inspection rejection notice.

(a) No motor vehicle required to be inspected, as provided in this Part and the Vehicle and Traffic Law, shall be operated on the public highways of the state unless a valid certificate of inspection or inspection extension or a CVIS-generated extension is displayed on the vehicle or can be presented. (Amended 12/29/10)

(b) Upon failure of a vehicle to pass an inspection, the owner and/or operator of said vehicle shall be provided with an inspection rejection notice and shall be notified that such necessary corrections or repairs may be made by a person or facility of his choice, and that upon completion of such repairs the vehicle shall be submitted for reinspection at any official inspection station licensed to perform the required inspection. (Amended 9/1/04)

(c) *Reserved*.

(d) If a vehicle subject to the OBD II emissions inspection fails to pass an OBD II emissions reinspection, the vehicle may be eligible for a waiver if the conditions contained in Section 79.25(a) have been met. (Amended 12/29/10)

(e) If a vehicle fails to pass a diesel emissions reinspection, the vehicle may be eligible for a waiver if the conditions contained in subdivision (h) of section 79.26 of this Part have been met. (Amended 1/23/08)

§ 79.6 Inspection sticker fees.

(a) The fee for a certificate representing that a vehicle has passed a safety inspection is $2.

(b) *Reserved*.

(c) Except as modified in section (e) below, the fee for a certificate representing that a vehicle has passed a combined safety and emissions inspection is $6. (Amended 9/1/04)

(d) *Reserved*.

(e) The fee for a certificate representing that a vehicle has passed a combined safety and diesel emissions inspection is $2. (Added 12/22/99)

§79.7 Official inspection station licenses.

(a) Inspections will be made only by official inspection stations currently licensed by the commissioner. Certificates of inspection and inspection rejection notices will be issued only by official inspection stations currently licensed by the commissioner. Before issuing licenses to such stations, the commissioner, after appropriate inquiry and investigation, must be satisfied that the station is properly equipped and has in its employ at least one full-time employee who is an appropriately certified motor vehicle inspector to conduct the type of inspections for which the station is licensed. Before being issued a license to inspect vehicles for the public, a station must be registered with the commissioner as a repair shop. (Amended 3/24/99)

(b) Each application for a new license to operate an official inspection station must be made on a form prescribed by the commissioner and must be accompanied by an application fee of $25, which is not refundable. If the application is approved, a license will be issued upon payment of an additional fee of $5 for each month or fraction thereof from the date of issuance to its expiration date, but in no event shall the fee for one year exceed $50 or $100 for two years. In the event that an applicant desires to establish inspection facilities at locations which the commissioner considers as separate and different locations, a separate application must be made and a separate fee paid for each location.

(c) *Inspection Fees*.

(1) An inspection station may charge a fee which may not exceed, but may be less than, the fee set by the following schedule: (Amended 5/4/05)

Vehicle Groups	Inspection Fees
Maximum gross weight (MGW) is the weight of the vehicle, as indicated on the vehicle registration certificate. Seating capacity is the number of passengers that may be transported in the vehicle, as indicated on the vehicle registration certificate. The MGW and the seating capacity are used to determine the applicable motor vehicle safety inspection. If a motor vehicle that is not registered in this State is presented for inspection, it must be inspected as if it were or as if it will be registered in this State. (Amended 7/01/12)	

GROUP 1	
((a)(1) Safety inspection of all motor vehicles that have a seating capacity, as indicated on the vehicle registration certificate, under fifteen passengers, and all motor vehicles, except trailers and motorcycles, that have an MGW, as indicated on the vehicle registration certificate, under 10,001 pounds. (Amended 12/29/10)	$10 .00
(2) Safety inspection of all motor vehicles, except trailers and motorcycles, that have an MGW, as indicated on the vehicle registration certificate, over 10,000 pounds and under 18,001 pounds, except when the registrant requests a heavy vehicle inspection. (Amended 12/29/10)	$15.00
(b) Safety inspection of all trailers, except semi-trailers, that have an MGW, as indicated on the vehicle registration certificate, under 18,001 pounds, except those trailers that have an MGW, as indicated on the vehicle registration certificate, over 10,000 pounds and under 18,001 pounds, when the registrant requests a heavy vehicle inspection. (Amended 12/29/10)	$ 6.00
GROUP 2	
(a)(1) Safety inspection of all motor vehicles that have a seating capacity, as indicated on the vehicle registration certificate, over fourteen passengers; all motor vehicles, except trailers, that have an MGW, as indicated on the vehicle registration certificate, over 18,000 pounds; those motor vehicles, except trailers, that have an MGW, as indicated on the vehicle registration certificate, over 10,000 pounds and under 18,001 pounds, when the registrant requests a heavy vehicle inspection. (Amended 12/29/10)	$20.00
(2) All trailers that have an MGW, as indicated on the vehicle registration certificate, over 18,000 pounds, and those trailers that have an MGW, as indicated on the vehicle registration certificate, over 10,000 pounds and under 18,001 pounds, when the registrant requests a heavy vehicle inspection. (Amended 12/29/10).	$12.00
(b) All semi-trailers.	$12.00
GROUP 3	
Motorcycles	$ 6.00
Emissions Inspection Fees (includes low enhanced, OBD II and diesel). (Amended 12/29/10)	
OBD II Emissions Inspection (performed at an inspection station located within the NYMA) (Amended 12/29/10)	$27.00
OBD II Emissions Inspection (performed at an inspection station located outside of the NYMA) (Amended 12/29/10)	$11.00
Low Enhanced Emissions Inspection (Amended 12/29/10)	$11.00
Diesel Emissions Inspection (smoke opacity test) (Amended 7/01/12)	$25.00

(2) *Repealed 12/29/10.*

(3) *Reserved 5/4/05.*

(4) Inspection fees are not subject to State and local sales tax. All fees listed include the cost of the inspection certificate. (Amended 8/13/03)

(5) If a licensed inspection station desires to inspect vehicles in groups other than those for which they are licensed, such station must first notify the commissioner who may approve such change after appropriate inquiry and investigation to determine that the station possesses qualified personnel, proper equipment and sufficient building area.

(6) If a vehicle fails a safety and/or emissions inspection, and is not removed from the station for repair, there shall be no charge for reinspection of the vehicle. A test drive by station personnel for the purposes of diagnosis or verification of repair does not constitute removal from the station. (Amended 5/4/05)

(7) An official emissions inspection station must perform both the safety and low enhanced emission or OBD II emission portions of an inspection on all vehicles subject to emissions inspection presented to it (except for reinspections). (Amended 12/29/10).

(i) Vehicles that are subject to the OBD II inspection may receive the safety and OBD II inspection at an official emissions inspection station located outside of the NYMA and do not need a Temporary Certificate of Emissions Waiver (form VS-1078). All diesel-powered vehicles subject to diesel emissions inspection (smoke opacity test) with "DEMA" printed on the registration document may receive the safety and diesel emissions inspection at a diesel emissions inspection station located outside of the NYMA (provided the station is licensed to perform the appropriate safety inspection) and do not need a Temporary Certificate of Emissions Waiver (form VS-1078). All diesel-powered vehicles subject to diesel emissions inspection (smoke opacity test) with “DEMA” printed on the registration document may receive the safety inspection at an inspection station that is other than a diesel emissions inspection station and geographically located outside of the NYMA (provided the station is licensed to perform the appropriate safety inspection), if a Temporary Certificate of Emissions Waiver (form VS-1078) is presented to the station. (Amended 7/01/12)

(8) An official inspection station outside the NYMA, which is not an official diesel inspection station, may only inspect a vehicle subject to the diesel emissions inspection if the operator of the vehicle presents a valid temporary certificate of emissions waiver (form VS-1078). (Added 12/22/99)

(d) Official inspection station licenses are not transferable. Where a change occurs in the ownership of a station, except as set forth in subdivision (e) of this section, a new application accompanied by the prescribed fee must be made by the new owner. A change of location, without a change in ownership, where the commissioner considers such a change as being to a separate, new and different location, requires an amendment setting forth the new location. This amendment must be submitted at least 30 days prior to the facility changing location. The Commissioner may waive the 30-day requirement in the case of extreme emergencies, such as natural disasters or eviction, and may in such cases issue a temporary permit to operate an official inspection station at the new location, pending final review of the amendment application. If the department has not conducted an on-site investigation of the

proposed new location within 30 days of receipt of the amendment application, a temporary permit to operate at that new location may be granted until the investigation takes place. A temporary permit issued pursuant to this subdivision shall remain in effect for no longer than 60 days. The commissioner must be notified in writing of a change of name without a change of ownership or locations and in such event no fee is required. (Amended 1/26/01)

(e) The commissioner must be notified immediately in writing if there is a change in the members of a partnership. A license in the names of two or more persons as partners or otherwise shall not expire on change of ownership, as long as one person named as a partner remains the owner or part owner. This policy applies where two or more partners increase the number of partners, but does not apply where an individual forms a partnership nor where a corporation is involved. Corporations must notify the commissioner immediately, in writing, of any corporation officer changes.

(f) *Approval of applications for inspection station license*. The commissioner reserves the right to determine the maximum number of public official emissions inspection stations that may be located in any county. The factors used to make this determination include: the total number of motor vehicles that are registered in any given county of the state; the total number of public official emissions inspection stations that are located in any given county of the state; motorist waiting times for inspections; and any other factors that the commissioner finds are materially and substantially related to making such determination. Such determination shall be re-assessed on an annual basis. If the maximum number of public official emissions inspection stations is reached in any county, the commissioner may refuse to approve an application for an original public official emissions inspection station license and may refuse to approve an application for an amendment for a public official emissions inspection station change of location, and shall place any such application on a waiting list. Any application fees or inspection station license fees for applications that are not approved pursuant to this subdivision shall be returned to the applicant. If the number of public official emissions inspection stations falls below the maximum in any county, an application for an original public official emissions inspection station license or an application for an amendment for a change of location that has been on the waiting list for the greatest length of time shall be reviewed by the commissioner. The Department shall post on its public website a summary of its findings regarding the number of public inspection stations that shall be permitted in each county. (Added 7/13/11)

Notwithstanding the provisions of this subdivision, the commissioner shall accept an application for review if: (Added 7/13/11)

(1) the application is for the renewal of a public official emissions inspection station license; or (Added 7/13/11)
(2) a registered new motor vehicle dealer, as defined in Vehicle and Traffic Law section 415(1)(f), or a new motor vehicle dealer applicant, submits an application for an original public official emissions inspection station license or an amendment application for a change of location for one public official emissions inspection station license that is owned by and/or operated in conjunction with such dealer; or (Added 7/13/11)
(3) an original application for a public official emissions inspection station license is received from a person who purchased a facility from another person, and such facility had a public official emissions inspection station license in good standing at the time of sale. For the purposes of this paragraph, "in good standing" means that, at the time of the sale: the facility's license is not suspended or revoked; the facility does not owe any

outstanding civil penalties; the facility has no hearings or appeals pending before the Department; and the facility has no litigation pending in which the Department is a named party; or (Added 7/13/11)

(4) a licensee submits an amendment application for a change of location, and the change of location is within the same county, or within five (5) miles of the current location. This paragraph shall not apply to licensees covered by paragraph (2) of this section; or (Added 7/13/11)

(5) the commissioner determines that there is a need for an inspection station in a specific geographic region within a county due to consumer factors including, but not limited to, distance and travel time between stations. If an application is approved pursuant to this paragraph, no subsequent application for change of location that is greater than 5 miles from the original location will be accepted for a period of 5 years. (Added 7/13/11)

(g) A fleet or dealer inspection license will not be issued or renewed for a facility owner who already possesses a public inspection license at that location. A holder of a fleet or dealer license who wishes to obtain a public inspection license must surrender the fleet or dealer inspection license upon issuance of the public inspection license.

(h) In order to perform emissions inspections, a station must be licensed as an official emissions inspection station and be staffed and equipped to conduct safety and emissions inspections pursuant to these regulations. This subdivision does not apply to official inspection stations restricted to the inspection of trailers, motorcycles, or any vehicles exempt from the emissions inspection requirement. (Amended 12/29/10)

(i) In order to perform diesel emissions inspections, a station must be licensed as an official diesel emissions inspection station and be staffed and equipped to conduct safety and diesel exhaust inspections pursuant to these regulations. This subdivision does not apply to official inspection stations restricted to the inspection of trailers, motorcycles, or any vehicles exempt from the emissions inspection requirement. (Added 12/22/99)

(j) A new motor vehicle dealer who is applying for a provisional dealer registration may concurrently apply for an official inspection station provisional license (hereinafter referred to as provisional license). The application for a provisional license shall be filed in such form and detail as the Commissioner shall prescribe, and shall be filed concurrently with the original application for an official inspection station license and new motor vehicle dealer and repair shop registration. If an application for a provisional license is denied, the applicant shall not be entitled to an appeal or hearing regarding the denial. (added 6/19/13)

(1) The holder of a provisional license shall be granted the same rights and privileges as are granted to the holder of an official inspection station license, except that the Commissioner may suspend a provisional license for the same reasons that an official inspection station license is subject to suspension for a violation or violations of this Part or of sections 303 or 306 of the vehicle and traffic law. If the provisional license is suspended pursuant to the provisions of this paragraph, the Commissioner shall provide the provisional licensee with actual notice of the suspension at least seven calendar days prior to the effective date. The holder of the provisional license shall not be entitled to an appeal or hearing if such provisional license is suspended. The holder of a

provisional license shall be subject to the same rules and regulations that apply to the holder of an official inspection station license, except if such rules and regulations are inconsistent with the provisions of this subdivision.

(2) The holder of a provisional license who has purchased or acquired, or who plans to purchase or acquire, the place of business from a registered new motor vehicle dealer:

(i) shall not conduct inspections in the name of the selling or transferring new motor vehicle dealer;

(ii) shall not use any unused certificate of inspection that had been issued to the selling or transferring registered new motor vehicle dealer by the Department;

(iii) shall display the provisional license in a conspicuous manner.

(3) If a new motor vehicle dealer with a provisional license purchases or acquires a place of business from a registered new motor vehicle dealer, then within thirty business days of the issuance of the provisional license, the dealer must ensure that the official inspection station license and all unused certificates of inspection that had been issued to the selling or transferring inspection station are surrendered to the Department or are accounted for.

(4) If the Commissioner has suspended a provisional license, or if a provisional license has expired, and the dealer that held such provisional license has not obtained a valid official inspection station license, then all official inspection station operations at that location shall immediately cease, and the dealer shall surrender the provisional license, and all unused certificates of inspection to the Department.

(5) The holder of a provisional license must meet all of the remaining requirements for the issuance of an official inspection station license within thirty days of the issuance of the provisional license.

(6) The provisional license shall expire sixty days from the date of issuance of such license or when the Department completes its investigation related to the application for an inspection station license, whichever is later.

(7) The holder of a provisional license must notify the Department immediately if the opening of the dealership is cancelled and such holder must return all supplies within ten days

§ 79.8 Duties of licensee.

(a) An official inspection station licensee is obligated to inspect vehicles in accordance with these regulations. By issuing a certificate of inspection, the licensee certifies that: (Amended 9/24/08)

(1) the brakes, steering mechanism, lights and such other equipment specified by these regulations have been inspected in accordance with these regulations; and
(2) such equipment and mechanism comply with the regulations of the commissioner.

(b) The licensee is responsible for all inspection activities conducted at the inspection station. The specific duties of an official inspection station are as follows:

(1) to conduct, as promptly as possible, a thorough and efficient inspection of any vehicle, including a vehicle registered in another state, which the station is qualified to inspect, and which is presented to the station for an official inspection. Such inspection must be performed in the manner prescribed; (Amended 12/29/10)

(2) to employ at all times, at least one full-time employee who is a certified motor vehicle inspector to perform the services required by these regulations. Such full-time certified motor vehicle inspector may be an employee or licensee, or the licensee may contract for the services. A licensee is liable for all the inspection activity of the contractor. Only a certified inspector may conduct a periodic inspection of a vehicle; (Amended 1/23/08)

(3) to maintain the minimum enclosed space, the necessary tools and equipment for inspection as required by these regulations;

(4) to make these regulations and procedures available to all personnel that are certified to perform inspections; (Amended 9/24/08)

(5) to make charges for inspections not in excess of the fee schedule. The inspection fee must not include any payment for corrections, adjustments, repairs or sales tax;

(6) An inspection station is not required to perform repairs to defective items for which a vehicle is rejected. If, however, the station does not perform repairs, the station must inform the motorist of the policy before the inspection is started. The station must prominently post a sign visible to the motorist during the normal course of business, and must also inform the motorist in writing and obtain the motorist's signature as acknowledgement; (Added 9/1/04)

(7) *Reserved*.

(8) to maintain a clean and orderly place of business with adequate supervision of employees making inspections;

(9) to keep records of safety and/or emissions inspections, reinspections and the results thereof, and a record of the issued certificates of inspection which shall be available for examination during normal business hours by any agent of the commissioner, or any other properly authorized law enforcement officer. All such records must be kept in the manner prescribed by the commissioner and must be kept for a minimum of two years; (Amended 9/1/04)

(10) to provide for the safekeeping of certificates of inspection, controlling their sequence of issuance, and ensuring that they are placed on vehicles only in accordance with these regulations; (Amended 12/29/10)

(11) to post prominently in the inspection station the official business certificate (form MV-61P), inspection groups and fee chart (form VS-77) and any other documents required by the commissioner to be posted; (Amended 1/23/08)

(12) to display on the outside of the premises an official inspection station sign. These signs must meet the specifications required by the Commissioner of Motor Vehicles (see section 79.13 of this Part), and be hung or mounted in such a manner that they are visible to the public upon entering the inspection facility; and (Amended 1/23/08)

(13) to surrender any and all unused certificates of inspection and station licenses when failing to renew or retiring from business, or when a license has been revoked. (Added 1/23/08)

(c) The inspection station will make an appointment when any vehicle that the station is qualified to inspect cannot be inspected in a convenient time span. (Amended 12/29/10)

(1) When the inspection station is unable to inspect a vehicle within a time span convenient for the vehicle owner or operator, the inspection station shall set up an appointment for performing the inspection. The appointment shall be in writing and shall include: (Amended 12/29/10)

(i) the time and date of the future appointment;
(ii) the date of inspection refusal;
(iii) a description of the vehicle, consisting of its year, make and model;
(iv) the name and address of the vehicle owner; (Amended 9/24/08)
(v) the signature of the inspection station licensee or a designated employee; and (Amended 9/24/08)
(vi) the facility name, address and telephone number. (Amended 12/29/10)

(2) The appointment date and time shall be not more than eight working days from the original request date, and shall be within the normal posted business hours of the station. The appointment location shall be at the same inspection station that was unable to inspect the vehicle within a time span convenient for the vehicle owner or operator. (Amended 12/29/10)

(3) The inspection station shall inspect the vehicle promptly when it is submitted for inspection at the appointed time.

(4) The inspection station may charge a deposit for setting up an appointment. The deposit may not exceed the fee for inspection. The deposit must be applied to the inspection fee if the motorist appears for the appointment. The deposit may be forfeited to the inspection station if the motorist fails to keep the appointment.

§ 79.9 Station requirements.

(a) Official inspection station licenses will be issued only to reputable applicants who possess the required qualifications.

(b) *Space*.

(1) The space requirements for official inspection stations, by class of station, are as follows:

(i) Class 1 station: In a city or village having a population of less than 10,000, and in an area outside a city or village, in any county of the State, a minimum enclosed area of 300 square feet is required.

(ii) Class 2 station: In a city or village with a population of 10,000 or more, a minimum enclosed area of 600 square feet is required.

(iii) Class 3 station. A motorcycle inspection station must have a minimum enclosed area of 120 square feet. (Added 9/2/98)

(2) When determining the area available to meet space requirements, office space, vehicle display area, supply area, or any unusual obstructions, shall not be part of the minimum area available to meet the above requirements. (Amended 8/13/03)

(3) *Reserved*.

(4) *Reserved*.

(5) The enclosed area of any station must be large enough to accommodate any vehicle in the group or groups which the station is permitted to inspect as indicated on the station's application and license. For a heavy vehicle inspection station licensed to inspect semi-trailers, this requires a door and service bay height of at least 13 feet, 6 inches and a bay length of at least 50 feet. For a heavy vehicle inspection station not licensed to inspect semi-trailers, this requires a door and service bay height of at least 13 feet, 6 inches and a bay length of at least 35 feet.

(6) Temporary expedients for obtaining additional space or facilities, such as tents, sheds or so-called curb service will not be permitted.

(7) If after approval, the minimum space requirements are not maintained, inspections may not be performed at that station until the minimum space requirements are again met. Any agents appointed by the commissioner are empowered to prevent further inspections by a station for failure to maintain adequate space and to permit inspections to be made again upon compliance with the requirements.

(c) *Waivers of dimension requirements*.

(1) The commissioner, where such action is required to provide adequate inspection facilities, may waive the space requirements in any area of the State.

(2) The commissioner may waive the dimension standards for a fleet or dealer inspection station which inspects only vehicles owned or controlled by the fleet or dealer and which fit into the station.

(3) The commissioner may waive the dimension standards for a public inspection station that was licensed prior to January 1, 1990, where there is an undue hardship or such waiver is in the public interest because of a lack of heavy vehicle inspection stations in an area. However, no waiver will permit a station to inspect a vehicle which cannot fit into its building.

(Amended 9/24/08)

(d) *Equipment*. All equipment and tools required by this section shall be properly maintained in such a manner that an inspection may be conducted in conformity with these regulations. (All of subdivision (d) Repealed and NEW 9/1/04)

(1) Each station must have, as a minimum, the following equipment, before it will be approved as an official inspection station:

(i) a one-hole paper punch that produces a round hole, one quarter inch in diameter; (Amended 9/24/08)

(ii) a tire tread depth gauge calibrated in thirty-seconds of an inch; (Amended 9/24/08) and

(iii) a tire pressure gauge calibrated in lbs./sq. in. (psi). (Amended 9/24/08)

(2) In addition to the equipment specified in paragraph (1) of this subdivision, an official emissions inspection station, or any station required to complete advisory emissions scans as defined in 79.24(j), must also have the appropriate computerized vehicle inspection system (CVIS), approved by the Department of Environmental Conservation and the Department of Motor Vehicles, capable of performing OBD II and low enhanced emissions inspections. This equipment, which shall be known as the NYVIP CVIS, shall include but may not be limited to: (Amended 12/29/10 and 7/13/11)

(i) computer;

(ii) controlling software;

(iii) communications link (e.g., modem, network interface controller) prescribed by DEC and DMV; (Amended 7/01/12)

(iv) printer;

(v) a DEC and DMV approved OBD II scan tool with appropriate connectors and software;

(vi) bar code scanner; and

(vii) a dedicated phone line for transmission of all inspection data if a dial-up system is used, or other equipment as prescribed by the equipment vendor if another communications system is used. If a dial-up system is used, an official emissions inspection station must maintain at least one phone line dedicated for use by the CVIS; this line may be shared by other CVIS units. No line(s) used by CVIS unit(s) may be shared by any other equipment. (Amended 7/01/12)

This equipment shall be delivered and installed in official emissions inspection stations as directed by the commissioner. The inspection station shall maintain the CVIS as prescribed in the station participation agreement, and shall successfully complete all required upgrades and replacements in a timely manner. The inspection station shall make no other modifications to the CVIS, except for the optional upgrades that are authorized by the station participation agreement. (Amended 7/01/12)

(3) *Repealed 12/29/10.*

(4) In addition to the equipment specified in paragraph 1 above, an official diesel emissions inspection station must also have the appropriate diesel emissions inspection system approved by the Department of Environmental Conservation as set forth in 6 NYCRR Part 217.

(5) In addition to the equipment specified in paragraph 1 above, official heavy vehicle inspection stations must also have:

(i) a measuring device for brake adjustment, such as a steel scale or ruler or equivalent; (Amended 9/24/08)

(ii) a one-sixteenth inch feeler gauge or equivalent; (Amended 9/24/08)

(iii) a brake drum gauge or equivalent, capable of measuring up to a twenty-four inch drum; (Amended 9/24/08) and

(iv) a rotor thickness gauge, such as a disc brake micrometer with a range from one inch to two inches, or equivalent. (Amended 9/24/08)

(6) Official emissions inspection stations must maintain their printers so that reports and other required documents print legibly and clearly. (Amended 12/29/10)

(7) *Reserved 9/24/08.*

(8) If, after approval, the equipment requirements are not maintained, inspections may not be inspector and any other agent appointed by the commissioner are empowered to prevent further inspections by a station for failure to maintain adequate equipment and to permit inspections to be made again upon compliance with the equipment requirements.

(9) In addition to the equipment specified in paragraph (1) of this subdivision, an official inspection station licensed to perform a safety inspection of any vehicle in group 1a or group 2a must also have a tint meter to measure the visible light transmittance through immovable glass. (Amended 01/01/17)

(e) *Waivers of equipment requirements*. (Added 9/24/08)

(1) *Repealed 12/29/10.*

(2) Any licensed official heavy vehicle fleet inspection station is exempted from the requirement to have a brake drum gauge capable of measuring up to a twenty-four inch drum, if there are no vehicles in that particular fleet that are equipped with brake drums of that size. The station is required to have and maintain a brake drum gauge capable of measuring the largest brake drums found in that particular fleet of vehicles at any time. If a vehicle is added to the fleet that is equipped with larger brake drums, the station must immediately acquire and maintain a brake drum gauge capable of measuring the larger brake drums. (Added 9/24/08)

(3) Any licensed official heavy vehicle fleet inspection station is exempted from the requirement to have a rotor thickness gauge, if there are no vehicles in that particular fleet that are equipped with disc brakes. However, if a vehicle is added to the fleet that is equipped with disc brakes, the station must immediately acquire and maintain a rotor thickness gauge. (Added 9/24/08)

(f) *Personnel*.

(1) Individuals will not be deemed to be certified motor vehicle inspectors unless they have a currently valid certified motor vehicle inspector's certificate, issued in accordance with section §79.17 of this Part. (Amended 9/24/08)

(2) Individuals who have been issued a certified motor vehicle inspector's certificate may be employed at any official inspection station for the purpose of inspecting only those vehicles appropriate to the type of vehicle they are allowed to inspect as it appears upon their certificate and appropriate to the type of vehicle allowed to be inspected by such official inspection station. (Amended 9/24/08)

(3) An automotive facilities inspector or any other agent appointed by the commissioner is authorized to test certified motor vehicle inspectors for competency where reasonable grounds exist to believe that the inspector is incompetent in conducting inspections of vehicles. If an inspector fails to pass such test, such inspector will be deemed incompetent, and will not be permitted to conduct further inspections until a subsequent special written examination authorized by the commissioner is passed. If the certified motor vehicle inspector fails the special written examination, the commissioner shall revoke the inspector's certificate. The certified motor vehicle inspector's certificate may be reinstated when the inspector certification training program is successfully completed and the written examination of such program is passed. (Amended 9/24/08)

(4) An automotive facilities inspector or any other agents appointed by the commissioner are empowered to prevent further inspections by an inspector deemed incompetent and to permit inspections to be made again by such a person upon reinstatement of the certificate or upon issuance of a new certificate after revocation.

§ 79.10 Certificates of inspection and inspection rejection notices: procurement, credit, refunds.

(a) Official inspection stations will purchase certificates of inspection from the Department of Motor Vehicles. The Department will furnish to official inspection stations, without fee, a supply of inspection rejection notices as necessary.

(b) Certificates of inspection are not transferable and may be issued only by the station which obtained such certificates from the commissioner.

(c) By March 1st of each calendar year, every inspection station owner must return to the department all unused or defective inspection certificates from the previous year. Refunds or credits will be allowed for such unused or defective certificates of inspection upon receipt of an application in a form prescribed by the commissioner and surrender of the certificates. A sticker returned as defective must have a legible serial number. Stickers voided or damaged by an act of the inspection station or inspector are not eligible for credit, except that stickers intentionally voided to prevent issuance may be eligible for credit at the department's discretion. Stickers may also be eligible for credit in the following cases: (Amended 12/29/10)

(1) upon request for change of class of license;

(2) upon request for cancellation of a license.

(d) Refunds or credits will be allowed for certificates of inspection lost or destroyed, while in transit from the Department of Motor Vehicles to the designated inspection station, upon receipt of an application in a form prescribed by the commissioner, accompanied by adequate proof of such loss or destruction.

§ 79.11 Issuance of certificates of inspection, issuance of inspection rejection notices, and replacements.

(a) A valid certificate of inspection, inspection rejection notice (issued by a CVIS or form VS-1075), temporary certificate of emissions waiver (form VS-1078) or 10-day time extension certificate (form VS-1077) may be removed from a motor vehicle only by an official inspection station as part of the inspection procedure, except as follows. A certificate of inspection or 10-day time extension certificate may also be removed by a duly authorized employee of the Department of Transportation in order to inspect a motor vehicle required to be inspected pursuant to State laws. A certificate of inspection or 10-day extension certificate may be removed by persons authorized by the commissioner when such persons are performing assigned inspection duties. (Amended 9/1/04)

(b) Any person may remove a certificate of inspection which has expired. A certificate of inspection issued without compliance with these regulations may be removed by any person authorized by the commissioner to do so. Any certificate of inspection, inspection rejection notice, temporary certificate of emissions waiver or 10-day time extension certificate which has been made invalid by reason of the casual (non-dealer) sale or transfer of the vehicle must be removed by the purchaser or transferee immediately upon accepting delivery of the vehicle. (Amended 1/23/08)

(c) *Replacement inspection certificates.*

(1) Only the Department of Motor Vehicles may issue a replacement inspection certificate for one which has been lost, mutilated, stolen or destroyed. The vehicle owner may obtain a replacement certificate by submitting: (Amended 1/23/08)

(i) a statement as to why a replacement certificate is necessary; and

(ii) a check for $2.00 made out to the Commissioner of Motor Vehicles; and

(iii) the remains of the original inspection certificate showing the date of expiration, the sticker serial number and the mileage,

OR

the CVIS generated inspection receipt, (Added 1/23/08)

(Amended 7/01/12)

OR

verification from the inspection station that issued the original certificate, consisting of a statement on the station's letterhead indicating the original certificate serial number, vehicle description, plate number, date issued and mileage at the time of inspection. The inspection station may charge a fee not exceeding $2 for providing this verification.

(2) Requests for a replacement certificate, including the material noted above, should be mailed to Consumer and Facility Services Bureau, P.O. Box 2700, ESP, Albany, NY 12220-0700.

(3) Failure to supply verification of inspection as noted above will prohibit the issuance of a replacement certificate and the vehicle owner will be required to have an original inspection performed in order to obtain a valid inspection certificate.

§ 79.12 Required records.

(a) *Records.*

(1) A form entitled "Motor Vehicle Inspection Record" (form VS-1074S, VS-1074SD, or VS-1074M) will be furnished without charge to the inspection stations. This form will be used to record inspections performed by the station that are not required to be kept in the appropriate CVIS equipment. A new form must be started on the first day of each year. Form VS-1074 must be kept in an orderly chronological manner. Such forms shall be completed in accordance with the "Instructions for Completing Vehicle Inspection Record", which is on the reverse of each form. The start of each month must be clearly marked. The official inspection station shall keep separate form VS-1074 records for each series of inspection stickers (safety, motorcycle, heavy vehicle safety and safety/diesel emissions) that the station is licensed to issue after inspection. The official inspection station shall retain all VS-1074 forms in its files for two years from the date of the last entry. (Amended 7/01/12)

(2) An official emissions inspection station located within the NYMA must record all safety/emissions (OBD II and low enhanced), safety, motorcycle, and heavy vehicle safety inspections (other than diesel-powered heavy vehicles) in the appropriate CVIS. An official emissions inspection station located within the NYMA must record the results of diesel emissions and safety inspection of heavy vehicles subject to diesel emissions inspection on the VS-1074SD form. (Amended 7/01/12)

(3) An official emissions inspection station located outside of the NYMA must record all safety/emissions (OBDII and low enhanced), safety, motorcycle, and heavy vehicle safety inspections in the appropriate CVIS. If the official emissions inspection station located outside of the NYMA is also licensed as a diesel emissions inspection station, diesel emissions inspections will be recorded on the VS-1074SD form and, if the diesel vehicle receives a heavy vehicle inspection, the safety portion will be recorded in the appropriate CVIS. (Amended 7/01/12)

(3) The official inspection station shall make the required entries on the appropriate paper or electronic record before the inspected vehicle leaves the premises of the official inspection station. (Added 7/01/12)

(b) Inspection stations are to maintain a supply of, and use, the following items:

(1) Certificates of inspection. See section 79.1(a) of this Part.

(2) Inspection rejection notices. See section 79.1(b) of this Part.

(c) If an inspection station fails to maintain a supply of certificates of inspection and inspection rejection notices, inspections shall not be performed at the station until such time as the station has ordered and received a supply of such certificates or notices. An automotive facilities inspector or any other agents appointed by the commissioner are empowered to prevent further inspections by a station for failure to maintain a supply of said certificates or notices, and to permit inspections to be made again upon obtaining a supply of said certificates or notices.

(d) All records required by these regulations and all records made by the official inspection station in connection with inspections, including shop orders and all repair bills (except those in amounts less than $5), shall be retained for a period of at least two years.

(e) An official inspection station must account for all certificates of inspection issued to it. An official emissions inspection station must record the receipt of all inspection certificates (except safety/diesel emissions inspection certificates) immediately upon receipt by entering the sticker order into the appropriate CVIS, as prompted by the CVIS software, so that the order received will be recorded in the computer. (Amended 7/01/12)

(f) For official emissions inspection stations, procedures for record-keeping must also include the daily printing of a copy of the daily inspection report for every day that inspections are performed. The station must keep copies of the inspection reports, in chronological order, for two years. Inspection certificate purchase invoices must also be kept for two years. An automotive facilities inspector or any other agent appointed by the commissioner must be given access to these records and any CVIS for the purpose of conducting an audit of the station's inspection records and activity. This includes the authority to produce hard copy of the station's inspection records on the system's printer, as well as the authority to obtain the computer disk which contains inspection records. (Amended 12/29/10)

§ 79.13 Signs.

(a) Official public inspection stations are responsible for obtaining and displaying the official inspection station sign. The size, shape and text of official inspection station signs must conform to the following specifications and must be displayed by a station licensed to inspect for the general public: (Amended 1/23/08)

(1) An official inspection station sign must be three feet wide and two feet high and made of a durable material which will withstand the outdoor elements.

(2) The sign may be either a single or double-faced sign, and shall be hung or mounted in such manner that it is visible to the public from outside the building.

(b) The text and design of the sign shall be as follows for the class of license issued. The appropriate sign must be hung or mounted in such a manner that it is visible to the public from outside the building.

(1) An official public inspection station that is located outside of the NYMA and that is licensed to perform safety/emissions and safety inspections for motor vehicles and trailers having an MGW under 18,001 pounds shall display this sign: (Amended 12/29/10)

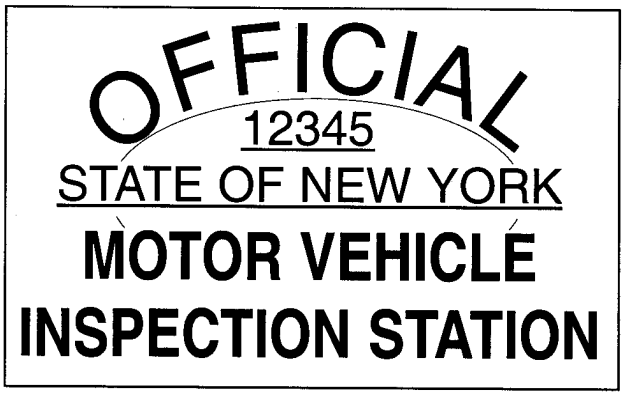

(2) An official public inspection station that is licensed to perform safety inspections for trailers having an MGW under 18,001 pounds, but is not licensed to perform safety/emissions and safety inspections for motor vehicles having an MGW under 18,001 pounds, shall display this sign: (Amended 12/29/10)

(3) An official public inspection station that is licensed to perform heavy vehicle safety inspections shall display this sign: (Amended 12/29/10)

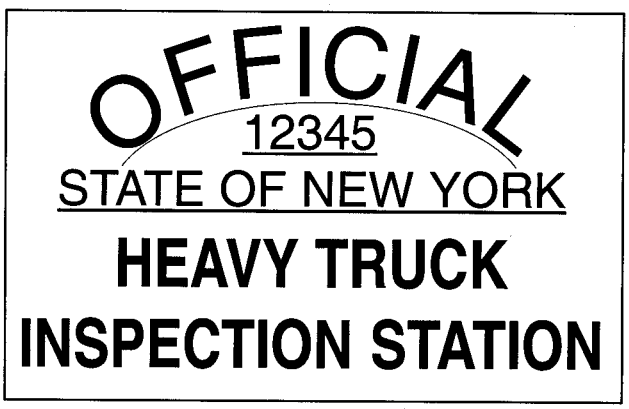

(4)(i) An official public inspection station that is located within the NYMA and that is licensed to perform safety/emissions and safety inspections for motor vehicles and trailers having an MGW under 18,001 pounds shall display this sign: (Amended 12/29/10)

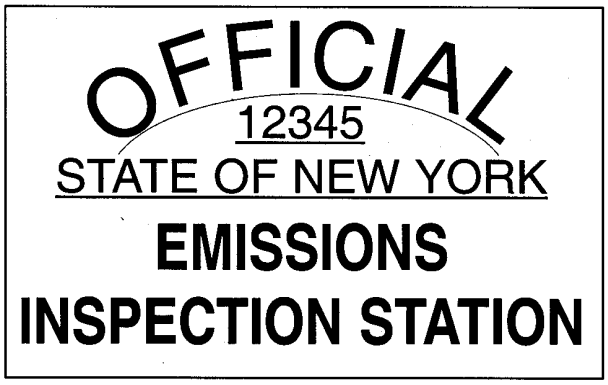

(ii) An official public inspection station that is licensed to perform safety/diesel emissions inspections shall display this sign: (Amended 12/29/10)

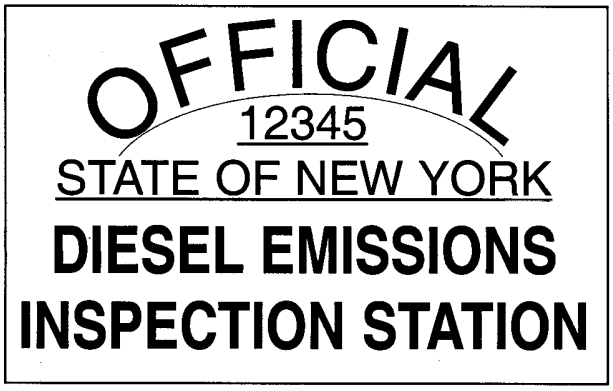

(5) An official public inspection station that is licensed to perform motorcycle inspections shall display this sign: (Amended 12/29/10)

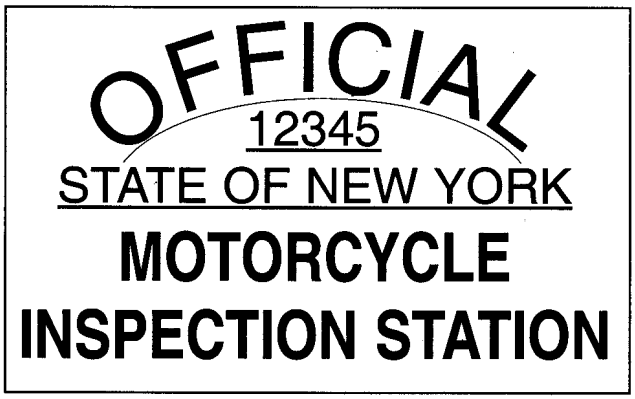

(6) Except for a motorcycle inspection station, the background of the sign shall be a national school bus yellow and the lettering thereon shall be black. Stations licensed prior to April 1, 1979 may use a sign with either an orange or national school bus chrome background. For a motorcycle inspection station, the sign shall have a blue background and the lettering thereon shall be orange or gold. (REPEALED & NEW 9/2/98)

(7) The letters in the words "STATE OF NEW YORK" shall be two inches high, with a stroke of approximately one-half inch. All other letters shall be four inches high, with a stroke of approximately three-fourths of an inch. (REPEALED & NEW 9/2/98)

(8) The word "OFFICIAL" shall be in an arc which shall have a radius of two feet, nine inches. (Added 9/2/98)

(c) The official inspection station number shall be placed upon the official inspection station sign in the area directly below the word "OFFICIAL", and such numbers shall be two-inch block letters and meeting the same requirements as to color prescribed in paragraph (b)(6) of this section. (Amended 8/13/03)

Note: Those stations using the station number sign hanging separately from the bottom of the "OFFICIAL" sign may continue to do so until replacement of sign is necessary. At that time, conformance with this section will be required.

(d) In addition, other signs bearing the same text as specified in this section may also be displayed on the premises. Such signs shall have the same design and be proportionate in dimensions to the official inspection station sign, but in no case shall exceed the size of that sign.

(e) The Inspection Groups and Fee Chart (form VS-77), provided by DMV, shall be conspicuously displayed in an office location or similar area of the station where the customer transacts business. Licensee shall be authorized to inspect only those groups of vehicles as indicated on the station Official Business Certificate (Form MV-61P). Additional fee signs shall be equivalent in size to the VS-77. (Amended 8/13/03)

(f) The names and certificate expiration dates of all certified motor vehicle inspectors currently employed to conduct inspections by such official inspection station must be conspicuously displayed to the public at the station. The posting shall be in a clear and legible manner, provided by the official inspection station, under the title "Certified Motor Vehicle Inspectors", with letters one half inch or more in height. The list of inspectors generated by the appropriate CVIS will be sufficient for this requirement. (Amended 7/01/12)

§ 79.14 Penalties.

(a) An official inspection station license and/or a motor vehicle inspector's certificate may be suspended or revoked or renewal thereof may be refused by the commissioner on one or more of the following grounds:

(1) conviction of a crime involving moral turpitude, or other cause which would permit disqualification from receiving a license upon the original application.

(2) violation of any provision of the Motor Vehicle Inspection Law (article 5 of the Vehicle and Traffic Law) or of these regulations.

(3) failure to register as a repair shop, or suspension or revocation of a repair shop registration (this subdivision does not apply to fleet and dealer inspection stations); (Amended 1/23/08)

(4) failure to attend a required motor vehicle inspection clinic or training session.

(b) In addition to, or in lieu of, suspending or revoking an official inspection station license, the commissioner may require an official inspection station to pay a civil penalty in accordance with subdivision (h) of section 303 of the Vehicle and Traffic Law. (Amended 7/01/12).

Note: An inspection station may be subject to additional penalties for failure to comply with Department of Environmental Conservation regulations concerning emissions standards. Refer to DEC regulations. (Amended 7/01/12).

§ 79.15 Official fleet and dealer inspection stations.

(a) *Portable fleet stations*. An official inspection station license (fleet) may be issued to a person, association or corporation owning or leasing more than 250 motor vehicles registered in the State of New York, permitting the licensee to establish an inspection station of a portable nature. Such a portable station may make inspections of motor vehicles owned or leased by such person, association or corporation, at locations in New York State owned or controlled by the licensee, in addition to the official location listed on the station's license. The official location must have space and equipment sufficient to perform inspections on any vehicle that the station is licensed for. Any remote location must have space and equipment sufficient for any inspection performed at that location. The location listed on the station's license shall be considered the official station location, and will be the place where the records, required testing equipment, and certificates of inspection will be required to be kept, except when inspections are actually being made at another location. (Amended 9/1/04)

(b) *Trailer only dealer stations*. Dealers registered under section 415 of the Vehicle and Traffic Law, engaged in the business of selling trailers may qualify for an official inspection station license (dealer) restricted to the inspection of only this type of vehicle. Such a license may be issued without the necessity for enclosed space as required in 79.9(b) of this Part, except that office space must be available on the premises for the safekeeping of inspection records and other items required by this Part. Such a dealer would be restricted to the inspection of light duty trailers with a gross weight of 10,000 lbs. or under, as required by section 79.22 of this Part. If the dealer wishes to inspect trailers with a gross weight of more than 10,000 lbs., the required enclosed space must be maintained and those trailers must be inspected inside the premises. (Amended 9/24/08)

(c) *Fleet Stations.*

(1) Any person, association or corporation, having registered in his or its name more than 25 motor vehicles, and any state agency or political subdivision having registered in its name more than five vehicles, may qualify for a license as an official inspection station (fleet). A person, association or corporation licensed as an official fleet inspection station may inspect only those motor vehicles registered in his or its name, those leased for a period greater than 30 days, and those motor vehicles owned by his or its employees. A state agency or political subdivision licensed as an official fleet inspection station may inspect only those motor vehicles registered in its name, those leased for a period greater than 30 days, and those motor vehicles registered in the name of any state agency or political subdivision. Any fleet inspection station that is exempt from payment of fees for inspection certificates under the provisions of subdivision (b) of section 305 of the Vehicle and Traffic Law may not inspect motor vehicles owned by its employees. An official inspection station (fleet or dealer) may inspect only those vehicles it is qualified to inspect. In addition, a state agency or political subdivision licensed as an official fleet inspection station that offers to inspect motor vehicles that are registered to another state agency or political subdivision is required to verify that the motor vehicles are registered to another state agency or political subdivision. A fleet inspection station may contract to provide inspection personnel at the fleet license facility, provided only certified inspectors perform

inspections. The fleet inspection station will remain responsible for all inspections. For the purposes of this Part, a political subdivision may include, but is not limited to: a county; a city; a village; a town; a school district; a fire district; a county extension service association; or a public improvement district. (Amended 12/29/10)

(2) A fleet inspection station license may be issued to a facility located outside New York State if all the following conditions are met:

(i) the applicant has at least one fleet inspection station located in New York;

(ii) the applicant has at least 25 motor vehicles registered in New York;

(iii) the applicant agrees to pay the travel expenses of Department of Motor Vehicles employees who are assigned to inspect, investigate or examine the facility or its records, or train its employees; and

(iv) the applicant agrees to abide by Article 5 of the Vehicle and Traffic Law and these regulations.

(3) A fleet inspection station licensed to inspect Group 1A vehicles must have the appropriate CVIS for emissions inspection. A person, association or corporation licensed as an official fleet inspection station may be exempted from this requirement if the station can demonstrate that it has more than 25 Group 1A vehicles in its fleet that are not subject to emissions inspection. A state agency or political subdivision licensed as an official fleet inspection station may be exempted from this requirement if the station can demonstrate that it has more than 5 vehicles in its fleet that are not subject to emissions inspection. If a fleet inspection station is exempted from purchasing the CVIS, any vehicle in the fleet subject to emissions inspection must then be inspected at another facility licensed and equipped to perform the proper inspection. (Amended 9/24/08)

(d) For parent and subsidiary corporations or separate entities where there is common ownership and management, common space, equipment and personnel may be used to qualify more than one fleet licensee or to qualify one location for a common license for both the parent and subsidiary corporation or separate entities with common ownership and management, provided the total number of vehicles registered in the name of the parent and subsidiary corporations, or the names of the separate entities, exceeds 25.

(e) Dealers registered under section 415 of the Vehicle and Traffic Law, holding motor vehicles for sale or demonstration, who qualify for a license as an official inspection station (dealer), may inspect only those vehicles held by them for sale or demonstration and those motor vehicles owned by their employees.

(f) An official inspection station (fleet or dealer) is subject to all rules and regulations governing the official inspection stations, except:

(1) it need meet only the space requirements for a class 1 station (see section 79.9(b) of this Part);

(2) no official inspection station sign shall be displayed by such a station;

(3) no schedule of fees need be filed with the application for such a station, nor need a schedule of inspection charges be posted within the station;

(4) *Reserved 8/13/03.*

(5) an official inspection station (fleet or dealer) is not required to maintain inspection rejection notices (form VS-1075), unless it inspects employee vehicles or is a state agency or political subdivision licensed as an official fleet inspection station that offers inspections to other state agencies or political subdivisions; (Amended 9/24/08)

(6) an official inspection station (fleet or dealer) need not register as a repair shop; and (Added 3/24/99)

(7) those instances where such rules and regulations are inconsistent with the provisions of this section, this section controls. (Amended 3/24/99)

(g) An official inspection station (fleet or dealer) is subject to all additional requirements applicable to official emissions inspection stations, unless the official inspection station (fleet or dealer) is restricted to the inspection of certain classes of vehicles. Official inspection stations (fleet or dealer) can be restricted to the inspection of:

(1) trailers,
(2) motorcycles,
(3) trucks with a maximum gross weight over 18,000 pounds,
(4) vehicles with a maximum gross weight over 8,500 pounds,
(5) diesel vehicles, except those diesel-powered vehicles that are model year 1997 and newer that have a gross vehicle weight rating (GVWR) under 8,501 pounds, (Amended 7/01/12) and
(6) any vehicle exempt from the emissions inspection requirement.

In addition, an official inspection station fleet or dealer license can be restricted to the inspection of any combination of these or other classes of vehicles. An official inspection station (fleet or dealer) is only required to have and maintain equipment necessary to inspect the classes of vehicles it is restricted to inspect, unless the station also inspects employees vehicles, in which case the station must have the same equipment required of a public station. An official inspection station (fleet) of a local government located in the NYMA must provide for the emissions inspection of vehicles for which such inspection is required in a manner consistent with these regulations and any modifications of the procedure used for emissions inspection within official inspection stations (fleet) of a local government must be approved in writing by the commissioner. (Amended 7/01/12)

(h)(1) The commissioner may issue a restricted public inspection license to an education facility, certified by the State Education Department, after the required investigation. The facility would be restricted to inspecting the following vehicles:

(i) vehicles owned by the education facility;

(ii) vehicles owned by the faculty;

(iii) vehicles owned by the students;

(iv) vehicles owned by the student's immediate family.

(2) The students will be permitted to conduct the required inspections under the supervision of a certified inspector.

(3) The facility will be exempt from all fees and will not be permitted to charge for the inspection.

(4) The facility will be subject to the same requirements as any other public inspection station, except that:

(i) they will not be permitted to display the official inspection station sign; and

(ii) they will not have to apply for registration as a repair shop.

(5) The facility will be issued a license for only one inspection location.

(6) An education facility licensed to inspect Group 1A vehicles must have the appropriate CVIS for emissions inspection. (Amended 12/29/10)

§ 79.16 Repealed 12/29/10.

§ 79.17 Qualifications and duties of certified motor vehicle inspectors.

(a) *Certified motor vehicle inspector qualifications*. In order to obtain a certified motor vehicle inspector's certificate, a person must have the following qualifications:

(1) They must be at least 17 years of age at the time of filing with the commissioner an application for a motor vehicle inspector's certificate; and

(2) They must have either:

(i) at least one year of experience in repairing motor vehicles within the last five years immediately preceding the date of filing an application for a motor vehicle inspector's certification obtained either in a firm in the automotive industry or in an approved cooperative work study program offering training in the automotive field; or (Amended 1/23/08)

(ii) a high school or vocational school diploma in vocational automotive trades or college certification of successful completion of first year of course toward an AAS degree in automotive technology.

(3) After filing an application for a motor vehicle inspector's certificate, a person must successfully complete the inspector certification training program and pass a written test, covering inspection procedures, authorized by the commissioner. A skills test may be required at the department's discretion. (Amended 1/23/08)

(b) *Duties of inspectors*. The specific duties of a certified motor vehicle inspector are as follows:

(1) When directed by one's employer, to conduct in a competent manner, as promptly as possible, a thorough and efficient inspection of motor vehicles, including a motor vehicle registered in another state, appropriate to the type of motor vehicle one may be allowed to inspect as it appears upon one's certificate and which the official inspection station is

allowed to inspect, and which is presented to the station for a statutory periodic inspection; and be able to make minor repairs to correct items which cannot be approved upon initial inspection. Such inspection must be performed in the manner prescribed by the commissioner. (Amended 9/24/08)

(2) Must have a knowledge of these regulations and a knowledge of the proper use of inspection equipment as required in section 79.9(d) of this Part to perform the services required by these regulations. (Amended 12/22/99)

(3) To attend all required certified motor vehicle inspection clinics or training sessions upon being duly notified by the commissioner to receive information relating to the subject of periodic inspection of motor vehicles.

(4) To make or cause to be made correct entries, in the CVIS, on any VS-1074 form or any other form prescribed by the commissioner in connection with periodic inspections of vehicles presented for inspection, appropriate to the type of vehicle to be inspected by such official inspection station and appropriate to the type of vehicle allowed to be inspected by such inspector. (Amended 9/1/04)

(5) A person who has been issued, by the commissioner, a motor vehicle inspector's certificate must present the certificate to one's current employer and to any other subsequent employer, who shall immediately record the certificate number on the appropriate forms or in the CVIS as prescribed by the commissioner. (Amended 7/01/12)

(6) During one's hours of employment at the official inspection station, the inspector must have possession of one's own motor vehicle inspector's certificate and must present on demand such certificate to an automotive facilities inspector or any other agents appointed by the commissioner. (Amended 7/01/12)

(c) *Miscellaneous*.

(1) In no event shall any of the aforementioned duties of certified motor vehicle inspectors, employed at an official inspection station, relieve the licensee of an official inspection station of the responsibility for all inspection activities conducted at the inspection station as stated in section 79.8(b) of this Part. (Amended 9/24/08)

(2) A certified motor vehicle inspector shall not permit one’s certificate to be used by any other person and shall not leave one’s certificate unattended. A certified motor vehicle inspector shall not use any other inspector's certificate, and shall not allow one’s certificate to be used by any other person. Such certificate shall not be altered or reproduced. The Department of Motor Vehicles may issue a temporary certificate after application to replace a defective or lost certificate. A temporary certificate is equivalent to a permanent certificate and must be safeguarded in the same manner. A certified inspector must not allow one’s temporary certificate to be used by any other person, and a certified inspector must not use any other inspector's temporary certificate. Upon receipt of a permanent certificate, the temporary certificate must be destroyed. (Amended 7/01/12)

(3) Certified motor vehicle inspector's certificates are valid for a period of three years. The Commissioner may alter this period so that the expiration of the certificate corresponds to a date three years from the last day of the month in which the inspector's birthday occurs. Certified motor vehicle certificates are renewable upon submission of a completed application and may require proof that the inspector has had at least 12 months of experience as a certified motor vehicle inspector during the five-year period immediately preceding the renewal date, provided that there is no suspension, revocation or renewal refusal of the certificate or other administrative action in effect pending any prosecution, investigation or hearing, and, if required, the inspector has passed the inspector certification renewal clinic. Certification may be temporarily renewed pending the outcome of an investigation or hearing. If an inspector's certificate is lost or stolen, the inspector must immediately notify the certification unit in the Albany office of the Department of Motor Vehicles. (Amended 7/01/12)

(d) *Repealed 12/29/10*.

(e) In order to perform OBD II inspections in an official emissions inspection station, using the appropriate CVIS, an inspector must also successfully pass the computer-based exam on the CVIS, in addition to the requirements set forth in subdivision (a) of this section. (Amended 7/01/12)

§ 79.18 *Reserved.*

§ 79.19 *Reserved.*

§ 79.20 Inspection procedure generally.

(a) The items set forth in sections 79.21 through 79.28 of this Part are to be inspected and the prescribed standards must be met before a certificate of inspection can be issued. An inspection rejection notice is to be given to the operator if the condition of any item required to be inspected is found defective, unless the necessary repairs are made before the motor vehicle leaves the premises of the inspection station licensee. A rejection notice is NOT an extension of an expired inspection certificate with the exception that a vehicle that has failed an OBD II emissions inspection may be issued a rejection notice with an extension for the purpose of verifying emission repairs and preparing the vehicle for reinspection, as directed by the appropriate CVIS. A receipt or invoice must be given to the motorist for the actual cost of the inspection. The receipt or invoice must contain the following information: (Amended 7/01/12)

(1) date of inspection;
(2) facility number;
(3) certified inspector number;
(4) vehicle information (year, make, mileage, plate #, or VIN if the vehicle has no plate);
(5) the actual fee charged the motorist for the inspection;
(6) results of the inspection (pass, fail), including any required advisory notifications to the motorist such as the air bag warning light malfunction advisory (see section 79.21(k) of this Part) or the tire pressure out-of-range advisory (see sections 79.21(c), 79.27(a) and 79.28(f) of this Part; (Amended 9/24/08) and
(7) the inspection certificate number, if the vehicle passes inspection. (Added 8/13/03)

If the vehicle passes or fails the inspection, the motorist must be given the inspection receipt that is printed by the appropriate CVIS. Although the CVIS-generated inspection receipt satisfies the requirements of this section, the station may, in addition, issue a standard receipt. (Amended 7/01/12)

(b) All inspections, except brake equalization tests, must be conducted within the enclosed portion of the premises of the official inspection station conducting the inspection. This regulation shall not apply to trailers required to be inspected under the provisions of section 79.22 of this Part. It shall be permissible to conduct the diesel emissions test of a diesel safety/emissions inspection outside the station only if the station does not have sufficient exhaust ventilation. The remainder of such inspection must be conducted within the enclosed portion of the station. (Amended 12/29/10)

(c) *Certified inspector procedure*. Upon accepting a vehicle for the purpose of conducting an official inspection of such vehicle pursuant to this section, the certified inspector shall conduct such inspection in the following manner:

(1) To complete the appropriate vehicle Inspection Record (VS-1074), or make appropriate and accurate entries in the CVIS, obtain the information necessary from any of the following: the vehicle, the windshield registration or windshield inspection certificate, the registration document (MV-639TR) or photocopy, a temporary registration (form MV-149), a certificate of sale (form MV-50), a certificate of title (form MV-999), a manufacturer's certificate of origin, a manufacturer's statement of origin, a salvage certificate (form MV-907A) or photocopy, a notice of registration acceptability (form VS-103), or an out-of-state registration or ownership document. If there is no VIN plate or state-issued VIN number (NYS or any other state), and none of the above-mentioned documents are presented, the inspection station must refuse to perform the inspection. (Amended 1/23/08)

(2)(i) The inspector, service writer or other authorized representative at an official emissions inspection station shall ask the customer if the vehicle has been inspected and/or rejected within the past 30 days, and shall request any rejection notice(s) pertaining to such inspection(s). Failure to request this information would require the station to perform a portion of the inspection at no charge to the customer if the CVIS later determines that the vehicle has passed that portion at another station within 30 days. (Added 9/1/04)

(ii) When prompted by the appropriate CVIS, the certified inspector will scan the bar coded reinspection information printed on the rejection notice by the CVIS to determine the correct reinspection. (Added 7/01/12)

(3) At the start of the inspection, the certified inspector shall remove or obtain any expired certificates of inspection, after being utilized for data entry, if required, and 10-day time extension certificates (form VS-1077) or temporary certificates of emissions waivers (form VS-1078) from the windshield or other location on the vehicle. Any inspection certificates or temporary certificates which are not yet expired are to be left on the vehicle until the vehicle passes inspection. (Amended 8/13/03)

(4) If the vehicle identification number (VIN) plate is missing or mutilated beyond recognition, complete form VS-110 (Notice of Missing or Mutilated Vehicle Identification Number) and mail it to address on form within 24 hours. A mutilated or missing VIN plate is not a cause for rejection or refusal to perform an inspection. (Amended 8/13/03)

(5) *Reserved.*

(6) A complete inspection of the vehicle pursuant to the requirements of these regulations must be conducted before either a certificate of inspection or an inspection rejection notice is issued. A certified inspector may not begin an inspection or accept a vehicle for inspection if the equipment required to perform a complete inspection is missing, broken or not functioning. If an official emissions inspection station begins an inspection and is unable to continue because of failure of the CVIS and is unable to create a record in the CVIS of the portion of the inspection that was completed, and the vehicle leaves the premises of the station, then upon re-inspection the vehicle must receive a complete inspection. The failed attempt shall not constitute an inspection and the customer shall not be charged a fee. (Amended 9/1/04)

(7)(i) If the condition of all items required to be inspected is found to comply with the specifications in this Part, then the certified inspector or the inspection station licensee shall affix or issue the proper certificate of inspection, with the mileage entered (except for trailers), check the waiver box and punch the trailer box if applicable, and punch the expiration date on the sticker, before the vehicle leaves the premises, as follows: (Amended 12/29/10)

(a) All motor vehicles that have a seating capacity, as indicated on the vehicle registration certificate, under fifteen passengers; and all motor vehicles, except trailers and motorcycles, that have an MGW, as indicated on the vehicle registration certificate, under 18,001 pounds, except those motor vehicles that have an MGW, as indicated on the vehicle registration certificate, over 10,000 pounds and under 18,001 pounds, when the registrant requested a heavy vehicle inspection - affix the appropriate safety, safety/emissions, or diesel safety/emissions inspection certificate to the lower left inside corner of the windshield, to the driver's left of the windshield registration sticker; (Amended 12/29/10)

(b) All motor vehicles that have a seating capacity, as indicated on the vehicle registration certificate, over fourteen passengers; all motor vehicles, except trailers and motorcycles, that have an MGW, as indicated on the vehicle registration certificate, over 18,000 pounds; and those motor vehicles that have an MGW, as indicated on the vehicle registration certificate, over 10,000 pounds and under 18,001 pounds, when the registrant requested a heavy vehicle inspection: (Amended 12/29/10)

(1) affix a heavy vehicle safety inspection certificate near the front registration plate where it can be seen at all times;

(2) *Repealed 12/29/10.*

(3) if diesel-powered and registered in the NYMA, also affix a safety/diesel emissions inspection certificate to the lower left inside corner of the windshield, to the driver's left of the windshield registration sticker. (Amended 12/29/10)

Note: All motor vehicles that have an MGW, as indicated on the vehicle registration certificate, over 18,000 pounds; those motor vehicles that have an MGW, as indicated on the vehicle registration certificate, over 10,000 pounds and under 18,001 pounds, when the registrant requested a heavy vehicle inspection; and all motor vehicles that

have a seating capacity, as indicated on the vehicle registration certificate, over fourteen passengers, registered in the NYMA and powered by a diesel engine, will be required to display BOTH the heavy vehicle inspection certificate and the safety/diesel emissions inspection certificate. Those vehicles registered outside the NYMA are exempt from diesel emissions inspection and will be issued the heavy vehicle inspection certificate only, unless the vehicle is presented to a diesel emissions and heavy vehicle safety inspection station and the appropriate safety and diesel emissions test is requested, and passed. (Amended 7/01/12)

(c) all semi-trailers - affix a heavy vehicle safety inspection certificate at eye level on the left (driver) side, straight out from the king pin on a non-removable part;

(d) all trailers over 18,000 pounds MGW and those trailers over 10,000 pounds MGW for which the registrants requested heavy vehicle inspection - affix a heavy vehicle safety inspection certificate on the left (driver) side of the trailer tongue where it can be seen at all times;

(e) trailers 18,000 pounds MGW and under, except those trailers over 10,000 pounds MGW for which the registrants requested heavy vehicle inspection - issue a safety inspection certificate. If issuing a VS-1082 safety certificate, punch the circle marked "T" and punch the appropriate expiration month. Enter the registration plate number in the "odometer reading" box on the back of the sticker, or the last 6 digits of the VIN if the trailer is not registered, and give the inspection certificate to the trailer owner to be kept with the trailer registration; and (Amended 1/23/08)

(f) *Reserved 8/13/03.*

(g) All motorcycles - affix the motorcycle inspection certificate to a permanent structural member on the left front side of the motorcycle visible when approaching the vehicle from the operator's left. (Amended 8/13/03)

(ii) If the vehicle fails inspection and repairs are not to be made immediately, complete the inspection rejection notice and give it to the operator.

(d) *Reinspections.*

(1) When a vehicle subject to the emissions inspection is presented to an official emissions inspection station for the purpose of reinspection (vehicle was previously rejected within 30 days by the same station or some other station), only the portions (safety or emissions) of the inspection that failed should be reinspected as long as a valid rejection notice or CVIS verification is received, and only the fee for those portions actually required to be reinspected may be charged. (Amended 12/29/10)

(2) When a vehicle is presented for the purpose of "safety-only" reinspection (vehicle was previously rejected within 30 days by the same station or some other station), a complete and thorough safety inspection must be conducted. (Amended 3/24/99)

(3) When a vehicle subject to the diesel emissions inspection is presented for the purpose of re-inspection to the same station within 30 days of the initial rejection, only the portion of the inspection (safety or diesel emissions) that was failed shall be reinspected. (Amended 9/1/04)

(e) When a vehicle subject to the diesel emissions inspection is presented for inspection in the NYMA with a valid New York State safety or heavy vehicle safety inspection certificate and a temporary certificate of emissions waiver (form VS-1078), a complete safety and diesel emissions inspection must be performed. (Amended 12/29/10)

(f) (1) All motor vehicles that provide school transportation, regulated passenger transportation (including vehicles commonly referred to as a "stretch limousine"), and municipal passenger transportation, as defined in 17 NYCRR 720.1, are subject to New York State Department of Transportation periodic inspection requirements, and, as provided in Section 79.2(d)(3) of this Part, are exempt from the New York State Department of Motor Vehicles periodic inspection requirements. (Added 2/23/11)

(2) If a passenger car, multipurpose passenger vehicle, or truck is presented for inspection, and such vehicle has been altered (a vehicle commonly referred to as a "stretch limousine") so as to have an extended chassis, or a lengthened wheel base, or an elongated seating area, and in the case of a truck, has been modified to transport passengers in addition to having been altered, the inspection station shall refuse to perform the inspection. The inspection station shall not charge the motorist for the inspection, and shall provide the motorist with instructions about how to comply with New York State Department of Transportation periodic inspection requirements. (Added 2/23/11)

(3) The provisions of paragraph two of this subdivision shall not apply if the New York State Department of Transportation has determined that the vehicle is not subject to its jurisdiction and has issued an "Exemption to NYSDOT Inspection Form Letter." If an altered vehicle, as set forth in paragraph one of this subdivision, is presented for inspection and the motorist provides a copy of the "Exemption to NYSDOT Inspection Form Letter" for such vehicle, the inspection station shall verify that the vehicle identified in the letter is the same as the vehicle being presented for inspection, that all entry blanks in the letter have been completed, and that the letter has been signed by an employee of the Department of Transportation. If the letter meets these requirements, the inspection station shall accept the vehicle for inspection. (Added 2/23/11)

§ 79.21 Inspection of motor vehicles.

This section comprises the safety inspection or the safety portion of a safety and emissions inspection for all motor vehicles that have a seating capacity, as indicated on the vehicle registration certificate, under fifteen passengers; and all motor vehicles and trailers that have an MGW, as indicated on the vehicle registration certificate, under 18,001 pounds, except: motorcycles; those motor vehicles and trailers that have an MGW, as indicated on the vehicle registration certificate, over 10,000 pounds and under 18,001 pounds, when the registrant requests a heavy vehicle inspection; and semi-trailers. Additional safety inspection requirements for all trailers, except semi-trailers, that have an MGW, as indicated on the vehicle registration certificate, under 10,001 pounds, may be found in section 79.22 of this Part. Additional safety inspection requirements for all motor vehicles and trailers, except semi-trailers, that have an MGW, as indicated on the vehicle registration certificate, over 10,000 pounds and under 18,001 pounds, except when the registrant requests a heavy vehicle inspection, may be found in section 79.23 of this Part. The emissions inspection requirements may be found in sections 79.24, 79.25, and 79.26 of this Part. (Amended 12/29/10)

(a) *Service brake system*. Every vehicle must be tested for brake equalization after a complete inspection has been performed. Such test must be on a dry, hard, level surface, free from loose material (indoors or outdoors) or with approved brake testing equipment set to approved specifications. At least one front axle wheel must be removed for brake inspection. (Identify location of wheel removed on VS-1074 if you use this form, or on the appropriate CVIS when prompted). However, an inspector may remove as many wheels as necessary to determine the condition of the braking system. A brake tester that has been approved by the commissioner may be used to test the vehicle's braking system in lieu of performing a brake equalization test and the requirement that a wheel be removed. (Amended 7/01/12)

Procedure	**Reject if:**
1. Brake Equalization − visually inspect condition of brake system.	1. The vehicle fails to make straight stop without significant wheel pull.
2. Inspect wheel cylinders and calipers for leakage.	2. Wheel cylinders or calipers leak.
3. Inspect hoses and lines for leaks, cracks, chafing, flattened or restricted section and improper support.	3. Hoses or lines leak, or are cracked, flattened or are insecurely fastened, copper tubing or compression fittings are used. (Amended 8/13/03)
4. Inspect master cylinder for leakage and reservoir fluid level.	4. Master cylinder leaks or reservoir is not full to its designed capacity.
NOTE: Visual inspection of mechanical system. It is imperative that brake system reservoir cover and the surrounding area be thoroughly cleaned before cover is removed to assure that no dirt is mixed with brake fluid.	
Test Pedal Reserve 5. While the vehicle is stopped, depress brake pedal under normal foot pressure (if vehicle is equipped with power brakes, engine should be running for this test).	5. Pedal reserve is less than 1/3 of the possible travel or less than the manufacturer's specification.
Test Brake for Fade 6. Apply brakes, using normal foot pressure. On vehicles equipped with power brakes the engine should be running.	6. Brake pedal does not hold its position for at least 60 seconds without fading.
Inspect Power Brake Unit 7. With engine stopped apply brakes several times to deplete power assist in system. Depress brake pedal and while maintaining force, start engine.(Amended 8/13/03)	7. Brake pedal does not fall slightly under force when engine starts.
Check Condition of Drum Brake Linings 8. Bonded linings − Measure the lining thickness at the thinnest point.	8. Thinnest point is less than 1/16 inch.
Riveted Linings 9. Inspect for loose or missing rivets. Measure lining thickness above rivet head at thinnest point.	9. Any rivets are loose or missing. Lining is worn to less than 1/32 inch over any rivet head.

Check Condition of Brake Linings and Pads (Amended 8/13/03) 10. Inspect for audible or visual sign from disc brake wear sensors, if vehicle is so equipped.	10. Disc brake wear sensor is activated.
11. All Linings and Pads − inspect for broken or cracked linings and parts of linings not firmly attached to their mounting. Also inspect for contamination.	11. Friction material is broken, cracked or not firmly and completely attached to its mounting. Friction surface is contaminated with oil or grease or there is metal-to-metal contact. (Amended 8/13/03)
Brake Drums 12. Inspect the condition of the drum friction surface for substantial cracks extending to the open edge of the drum (short hairline heat check cracks should not be considered). Inspect for cracks on the outside of drum. Inspect for mechanical damage. Inspect for contaminated friction surface.	12. There are substantial cracks on the friction surface extending to open edge. There are external cracks. There is evidence of mechanical damage other than wear. Friction surface is contaminated with oil, grease, or brake fluid.
Brake Rotor 13. Inspect for substantial cracks extending to edge of rotor. Inspect for mechanical damage. Inspect disc for any distortion or scoring that would impair braking system.	13. There are substantial cracks extending to edge. There is evidence of mechanical damage other than wear. Distortion or scoring impairs the braking system.
Brake Components 14. Visually inspect components of the braking system.	14. There is any disconnected, improperly installed, broken, frozen, seized, bypassed, or missing component of the braking system. (Amended 5/4/05)
NOTE: An inoperative anti-lock brake system or an illuminated ABS warning light are not causes for rejection. (Added 8/13/03)	

(b) *Parking brake.* If 1962 or older vehicle is not originally equipped with parking brake, disregard this procedure.

Procedure	**Reject if:**
Parking Brake Function 1. Set the parking brake firmly. If vehicle is equipped with an "automatic parking brake release" type that releases itself when gear selector is placed in a position other than park or neutral, omit paragraph	1. Parking or holding brake will not hold the vehicle stationary with engine running at a slightly accelerated speed with shift lever in drive position for automatic transmission or shift lever in low gear

1 of this subdivision and inspect all other points of the parking brake.	while engaging the clutch on a standard transmission.
Parking Brake Components 2. Check parking brake components for general condition.	2. Cable(s) are visibly frayed or frozen, or there are missing or defective cotter pins or broken or missing retracting springs or worn rods or couplings. (Amended 8/13/03) There is no reserve travel in the lever or pedal when the brake is fully applied. The ratchet and pawl or other automatic locking device does not hold the brake position or cannot be properly released.
Parking Brake Independence 3. Examine means by which parking brake works.	3. Parking brake is activated by same means as service brake. Parking brake is not mechanically activated.

(c) *Tires*. A vehicle which is used primarily in an authorized landfill may be equipped with foam-filled tires. Such tires would not be rejectable under paragraphs 2, 3, 4 and 5. However, the tires must be inspected for the required tread depth and restricted usages.

Note: If a tire obviously has the required tread depth, it is not necessary to use the tread depth gauge. Use of the gauge is only required when tread depth is questionable and a reading must be obtained to determine whether or not the tire must be rejected. Do not check tread depth at tread wear indicator bar or tie bar.

Procedure	**Reject if:**
Tires 1. Tire tread depth readings shall be taken in two adjacent major grooves showing the most tread wear. Readings for a tire which has the tread design running across the tire or for a siped tire where such tread design is permitted, shall be taken at or near the center of the tire. Inspect all tires mounted on vehicles (do not inspect spare tire).	1. Any tire is worn to less than 2/32 of an inch of major tread design at the two worst adjacent points at which the gauge readings are obtained. However, the front tires of a motor vehicle, (other than a trailer), with an MGW of 10,000 pounds or more, or a truck tractor, must not be worn to less than 4/32 of an inch of major tread design at the two points at which the gauge readings are obtained. (Amended 1/23/08)
2. Inspect for breaks or cuts.	2. Tire has fabric break, or a cut in excess of one inch in any direction and deep enough the reach the body cords.
3. Inspection for bumps, bulges or knots.	3. Tire has visible bumps, bulges or knots indicating partial failure or separation of the tire structure. (Amended 12/22/99)

4. Inspect for any ply or cord structure that is exposed. 5. Visually inspect for restricted usage marking on tires. Every tire manufactured for highway use will be labeled with one symbol DOT which indicates that the tire conforms to the applicable Federal Motor Vehicle Safety Standards.	4. Tire has any portion of the ply or cord structure exposed. 5. Tire is marked "Not for Highway Use", "for farm use only", "for racing use only", "for temporary use only", or other markings having like meaning, or the tire size designation is preceded by a "T". (Amended 1/23/08)
Wheel Fasteners 6. Inspect for number and condition of wheel fasteners.	6. Any wheel fastener is missing or broken.
7. Check Tire Pressure (Added 9/1/04)	7. Advise customer if tire pressure is not within range recommended by vehicle manufacturer. (Added 9/1/04) **NOTE:** Tire pressure check is advisory only, do not reject the vehicle. The customer must be notified in writing.

(d) *Steering, suspension, front end and chassis/frame*.

Procedure	**Reject if:**
Steering Wheel Free Play 1. For vehicles equipped with power steering, the engine must be running and the fluid level, belt tension and condition must be adequate before testing. With front tires in straight ahead position, turn steering wheel until motion can be detected at the front tires. Align a reference mark on steering wheel with a mark on a ruler and slowly turn steering wheel in the opposite direction until motion can again be detected at the front tires. Measure free play at steering wheel.	1. Steering wheel movement exceeds: Power Steering: 2 inches free play Manual Steering: 3 inches free play

Steering Linkage 2. Turn steering wheel to extreme right or left positions to determine if there is any binding or interference (on vehicles equipped with power steering, engine must be running). With vehicle raised, visually inspect steering linkage and front end components for excessive wear and/or looseness.	2. There is any tightness, binding or interference when turning the steering wheel completely to the right or left. There is excessive wear and/or looseness in any of the following parts: wheel bearings, upper and lower cross shaft and bushing, upper and lower outer pins and bushings, idler arm, center control arms, tie rod ends, drag link ends, steering and pitman arms, gear box mounting, rack and pinion mounting, steering column mounting or steering wheel shaft mounting; the coupler or universal between gear box and steering column is frayed or cracked; the adjustable column lock or latch does not hold column securely; the steering shock damper displays visible leakage or is missing or broken.
Spring and Torsion Bars 3. Inspect general condition of springs and torsion bars.	3. Any front or rear spring or air springs, if equipped, are noticeably sagging or broken, or spring shackles are excessively worn or loose. Any torsion bar or stabilizer bar, including mechanical linkage, is broken, disconnected, missing or bent. (Amended 1/23/08)
4. Visually inspect chassis/frame or primary uni-body member for general condition. (Amended 9/1/04)	4. i. The front wheels are visually out of line. ii. Any axle or front end assembly is bent or twisted. iii. Chassis/frame or primary uni-body member is severely rusted at suspension attachment points. (Amended 8/13/03) iv. Bolts or rivets are loose, missing or in a deteriorated condition due to rust. v. Chassis/frame or primary uni-body member is cracked or broken. (Amended 8/13/03)
Power Steering System (Amended 8/13/03) 5. Inspect for power steering operation, leakage and condition of belts.	5. System does not work, there are visible leaks, or the power system belt is loose. V-belt(s) cracked or fraying. Flat serpentine belt(s) "chunking" (ribs missing) in the micro V area, flat outer surface is cracked, or belt is fraying. (Amended 8/13/03)
NOTE: Small cracks in the micro V ribs of a serpentine belt are not reason for rejection. (Added 8/13/03)	

Shock Absorbers 6. Visually inspect for broken or missing shocks and any loose or broken mounting brackets and bolts.	6. Shock absorbers are missing on a vehicle originally equipped with them, or are broken. Mounting bolts or mounts are broken or loose.
NOTE: A leaking shock absorber or MacPherson strut is not cause for rejection.	

(e) *Lighting and reflectors*. The following are the only lights that must be inspected:

- Low beam headlamps (operation only). (Amended 3/5/02)
- High beam headlamps (operation only).
- Tail lamps.
- Stop lamps.
- Directional signals.
- Traffic hazard warning lights (four-way flashers).
- Backup lights.
- Number (license) plate lamp(s).

Do not reject a vehicle for the condition or operation of any of the following:

- Side marker lights (under 80" in width).
- Any exterior headlamps, spotlights, fog lights, etc., added on to vehicle, as long as the headlights may be operated independently from such lights. (Amended 5/4/05)

Note: Additional signal lights on side mirrors or marker lights that blink (with the turn signals) are not required turn signals, and the vehicle must not be rejected for the condition or operation of such lights. (Amended 9/1/04)

Procedure	**Reject if:**
Headlamps 1. All vehicles must be equipped with an approved headlamp system. Visually check operation of high and low headlamps. (Not required on trailers) (Amended 1/23/08)	1. Headlamps are not of an approved type. Lens is missing, broken (piece missing), or has a crack that results in an opening. (Amended 8/13/03) Any filament in headlamp unit fails to light properly. Lights can be moved easily by hand due to a broken fender or loose support, or if a good ground is not made by mounting. Foreign material is placed on headlamps that interferes with light beam of lamp (such as shields, painted lens, etc.).
NOTE: Modification of an original headlamp system must result in the replacement with a complete approved system.	

2. Visually inspect only the following for proper operation and condition: Minimum Lighting 1952 and older model vehicles: REAR • at least one red tail lamp • at least one red or amber stop lamp 1953 and newer model vehicles: FRONT • at least two amber directional signals (Not required on trailers) (Amended 1/23/08) REAR • at least two red or amber directional signals • at least two red tail lamps • at least two red stop lamps (1971 or older models, red or amber) • at least one white backup lamp (1969 and newer) (Not required on trailers) (Amended 1/23/08) • at least one license plate lamp (Added 8/13/03)	2. Lamps are not securely mounted or do not produce a steady light with switch on or brake applied. Lamps do not operate properly in all switch positions. (Amended 8/13/03) a. Lamps are not of an approved type. b. Any lens is missing, broken (piece missing), or has a crack that results in an opening or improper fit so that light is being emitted. (Amended 8/13/03) c. Vehicle is not equipped with minimum lighting requirements for its model year. d. Any lens has been repaired with unapproved material.
3. Every motor vehicle equipped with directional signals must also be equipped with an indicator lamp.	3. Interior indicator lamp does not function properly. (If vehicle has an exterior indicator lamp only, check for proper operation.)

4. 1966 and newer vehicles must be equipped with a traffic hazard warning device (four-way flasher).	4. Not properly equipped with a traffic hazard warning device which operates independently of ignition or directional signal switches.
5. Supplementary lighting − Any exterior headlamps, spotlights, fog lights, etc., added to those originally placed on the vehicle by the manufacturer, must operate on a switch or switches separate from the headlamp switch.	5. Add-on exterior lights are not on a switch separate from the headlamp switch.
6. 1987 and newer passenger cars must be equipped with a high-mounted stop lamp on the vertical centerline, except those with "Custom" as the make of the vehicle.	6. Not equipped with a high-mounted stop lamp on the vertical centerline. Stop lamp is not of an approved type, is not securely mounted, does not function when brake is applied, has a broken lens allowing white light to be visible from the rear of the vehicle, or has any material such as tape, cellophane or plastic on or over the lens. All stop lamp bulbs or original equipment must light. (Amended 8/13/03)
7. Every motor vehicle must have a rear number (license) plate lamp. When multiple bulbs were original equipment, all must be present and operational. (Amended 9/1/04)	7. Rear number (license) plate lamp is not of an approved type, is not securely mounted or does not illuminate when the tail lamps are turned on.
8. In addition to the lighting required in paragraph 2 of this subdivision, vehicles 80" or more in width must have the following: FRONT • Two amber clearance lamps • One amber identification lamp (three-lamp cluster) (three-lamp cluster) (Not required on trailers) (Amended 1/23/08) EACH SIDE • One amber side marker • One red side marker • One amber Class A reflector • One red Class A reflector REAR • Two red clearance lamps • One red identification lamp (three-lamp cluster)	8. Lamps are not securely mounted or do not produce a steady light with switch on or brake applied. Lamps do not operate properly in all switch positions. Lamps are not of an approved type, or any lens is broken, missing, or improperly fit so that light is being emitted without passing through the lens.

NOTE: Historical vehicles lighting. In lieu of inspecting headlamps and all lamps on a vehicle registered as "Historical", and bearing Historical plates, you may accept an affidavit (form VS-18) from the owner or operator certifying that the vehicle is only operated during the daylight hours.

(f) *Windshield and other glass*. Every 1935 and newer vehicle must be equipped with a windshield, except trailers. All must be inspected. A star is considered to be a bruise from which multiple cracks extend, such as a "stone bruise", shot, etc.

Procedure	**Reject if:**
Approved Glass 1. Inspect windshield and other windows on vehicle for presence of approved safety glazing. (Amended 8/13/03)	1. Vehicle is not equipped with a windshield. Any 1935 or newer model year vehicle is not equipped with approved safety glass with an AS-1, AS-10 or AS-14 rating in the windshield or an AS-1, -2, -3, -10 or -11 rating in the windows to the left, right and rear of the driver. Any 1935 or newer model year vehicle is not equipped with approved safety glass or rigid plastic, if plastic is used with an AS-1, -2, -3, -4, -5, -10 or -11 rating in any rear window on a convertible pickup truck or light-duty truck. (Amended 7/01/12)
Cracks 2. Inspect windshield and other windows for cracks or sharp edges.	2. Windshield or other window is broken or has exposed sharp or jagged edges. *Windshield Only*: Any "star" larger than 3 inches in diameter is located in any area of the windshield. There is a crack more than 11 inches long, any part of which extends into the path of the windshield wiper(s).
3. Window Tint **NOTE:** If a windshield or a window, through observation, clearly meets the required visible light transmittance standard, it is not necessary to use the tint meter. Vehicles displaying a valid MV-80W.2 “Exempt Tinted Windows” sticker need not be inspected for window tint.	3.

Procedure	Reject if:
Model year 1991 or older vehicles:	
(a) Inspect the windshield for proper visible light transmittance.	(a) Any part of the windshield below the top 6 inches allows less than 35% visible light transmittance.
(b) Inspect all side windows adjacent to or forward of the driver's seating position for proper visible light transmittance.	(b) Any part of the window allows less than 35% visible light transmittance.
(c) Inspect the rear window of any vehicle that is not equipped with dual outside rearview mirrors for proper visible light transmittance.	(c) Any part of the rear window allows less than 35% visible light transmittance.
Model year 1992 or newer vehicles:	
(d) Inspect the windshield for proper visible light transmittance.	(d) Any part of the windshield below the top 6 inches allows less than 70% visible light transmittance.
(e) Inspect all side windows adjacent to or forward of the driver's seating position for proper visible light transmittance.	(e) Any part of any side window adjacent to or forward of the driver's seating position allows less than 70% visible light transmittance.
(f) Inspect all side windows to the rear of the driver's seating position on any vehicle classified as "Passenger Car" on the FMVSS certification label for proper visible light transmittance.	(f) Any part of any side window to the rear of the driver's seating position on any vehicle classified as "Passenger Car" on the FMVSS certification label allows less than 70% visible light transmittance.
(g) Inspect the rear window of any vehicle that is not equipped with dual outside rearview mirrors for proper visible light transmittance.	(g) Any part of the rear window allows less than 70% visible light transmittance.

(g) *Mirrors.*

Procedure	Reject if:
Location and Mounting 1. Inspect mirrors for proper location and mounting.	1. a. 1967 and older model not equipped with at least one mirror, either an interior or left outside mirror. b. 1968 and newer model not equipped with a left outside mirror. c. 1970 and newer model not equipped

	with an adjustable interior mirror in addition to the left outside mirror, unless the vehicle is equipped with dual outside mirrors. (Amended 5/4/05) d. Truck-tractor does not have both a left and right outside rear view mirror. e. There is no left and right outside mirror on a vehicle with a permanent obstruction of the rear window. f. Any mirror cannot be properly adjusted to provide a clear and full view to the rear. g. Any mirror is not securely mounted. (Added 12/22/99)
Cracks-Broken-Discoloration 2. Inspect reflecting surface for any cracks, breaks or discoloration.	2. Any mirror is cracked, broken or discolored.
NOTE: Vehicles with mirrors that are not subject to section (1) are to be inspected and rejected if the mirror is cracked, broken or discolored, unless the mirror and housing are completely removed from the vehicle. (Added 8/13/03)	

(h) *Reserved.*

(i) *Windshield wipers*.

Procedure	**Reject if:**
Windshield wipers **NOTE:** Rear window wipers are not part of inspection (Added 8/13/03) 1. Visually inspect for presence of windshield wipers or wiper.	1. Vehicle is not equipped with the number of wipers with which it was originally equipped.
Windshield Wiper Operation 2. Inspect for satisfactory operation and condition of wiper blades.	2. Any wiper is inoperative, does not operate freely, or is improperly adjusted. Any wiper blade has dead, torn, or badly worn rubber, or material other than the rubber wiper blade comes in contact with windshield. Any wiper controls are located beyond the reach of the driver so that the controls cannot readily be operated unless the driver moves from normal driving position. (Amended 8/13/03)

(j) *Horn*.

Procedure	**Reject if:**
Horn 1. Inspect for presence of horn and operation. 2. Bulb- or hand-operated horn is acceptable if vehicle was originally equipped with such.	1. Vehicle is not equipped with at least one horn which shall produce a sound sufficiently loud to serve as a danger warning. (Amended 8/13/03) Horn is not securely fastened to the vehicle. Horn button or actuating device does not work properly or is not within easy reach of driver.

(k) *Seat belts.*

Procedure	Reject if:
1. Inspect for the required number of seat belts.	1. i. 1965 to 1968 models, not equipped with at least two safety belts for the front seat. ii. 1967 and 1968 models, not equipped with at least one safety belt for rear seat for each passenger for which the rear seat of such vehicle was designed. iii. 1969 or newer model, not equipped with at least one safety belt for each passenger seat position.
2. Check seat belt function by buckling seat belts, tugging on them and unbuckling them. (Amended 8/13/03)	2. i. Any seat belt cannot be buckled. (Amended 8/13/03) ii. Any seat belt is pulled out of its anchors or was not anchored at the start of the inspection. (Amended 8/13/03) iii. Any seat belt unbuckles when tugged. (Amended 8/13/03) iv. Any seat belt cannot be unbuckled. (Amended 8/13/03) v. Any automatic adjuster does not recoil. vi. Any motorized belt does not activate when the front door is closed and the ignition is turned on. vii. Any motorized belt does not release when the door is opened and the ignition is turned off.

3. On 1998 and newer models, inspect the inflatable restraint system readiness indicator light (air bag warning light). The light should illuminate when the key is turned on, and should go out within a few seconds of starting the engine. (Amended 9/1/04)	3. On 1998 and newer models advise the motorist on the invoice or inspection receipt if the warning light does not illuminate, or indicates a problem in the restraint system by remaining illuminated with the engine running. Do not reject. (Amended 9/1/04)

(l) *Fuel leaks.* (Amended 1/23/08)

Procedure	**Reject if:**
1. Check the fuel system, including the fuel tank and lines, for leaks, including auxiliary heating or refrigeration units. (Amended 1/23/08)	1. Any leak is found in any fuel system, tank or lines to such a degree as to cause dripping or pooling of fuel. (Amended 1/23/08)
2. Compressed Natural Gas (CNG), Liquefied Petroleum Gas (LPG) or Liquefied Natural Gas (LNG) fuel systems. (Added 1/23/08)	2. Any fuel leakage from the CNG, LPG or LNG system detected audibly, visually or by smell. (Added 1/23/08)
NOTE: Some brief fuel leakage, water vapor at the fittings, or decompression may occur during refueling, causing temporary frosting of CNG or LPG fuel system parts. If the vehicle has been refueled shortly before inspection, care must be taken to distinguish these temporary occurrences from actual leaks. Also, in hot weather some condensation on the system is normal. (Added 1/23/08)	

§ 79.22 Light duty trailers.

This section contains additional requirements for the inspection of trailers with a maximum gross weight of 10,000 pounds or under, other than semi-trailers. The vehicles subject to inspection under this section are subject to procedures found in subdivisions 79.21(a), (c), (d)(3), (d)(4), (d)(6), and (e) of this Part, in addition to the following: (REPEALED & NEW 12/22/99)

Note: If a trailer is equipped with brakes, they should be checked for compliance with section 79.21(a). However, do not reject a trailer for lack of brakes.

(a) Hitch System.

Procedure	**Reject if:**
1. Visually inspect for secure hitch.	There are broken or missing bolts, broken welds or any looseness in the hitch attachment.

§ 79.23 Medium duty vehicles.

This section contains additional requirements for the inspection of vehicles with maximum gross weights over 10,000 pounds up to and including 18,000 pounds, which shall be known as medium duty vehicles but not including those vehicles for which the registrants request heavy vehicle inspection. The vehicles subject to inspection under this section are also subject to procedures found in subdivision 79.21 of this Part, in addition to the following: (Amended 9/1/04)
(a) *Brake system.*

Procedure	Reject if:
1. Brake equalization. Each vehicle shall be tested for brake equalization before and after a wheel is pulled. This test must be done on a hard level surface, free from loose material (indoors or outdoors), or on a brake equalization machine. At least one rearmost factory equipped axle brake drum or hub and drum assembly must be removed unless the brake backing plate is designed to allow the inspection of all brake lining thickness and drum condition. It is not necessary to remove a front wheel. If disassembly is not required, the second brake equalization test may be omitted. (Amended 9/1/04) Visually inspect the brake system.	1. The vehicle fails to stop without significant pull.
2. Determine how the brakes are applied (parking and service).	2. There are not two separate means of brake application or these two separate means of applying the service and parking brakes are connected in any way, so that failure of any one part leaves the vehicle without brakes. The parking brake operating control is not separate from the service brake control.
3. Inspect for presence of brakes on all wheels.	3. There are missing or inoperative brakes on any wheel except for the following: 1980 and older trucks and tractors which have three or more factory equipped axles, in some cases, may not have brakes on the front axle. These vehicles should not be rejected unless there is evidence that front brakes existed (i.e. Drums or backing plate assemblies are present).
4. Inspect for a single pedal capable of operating all the brakes, if vehicle is designated as a 1954 or newer model.	4. The vehicle is not equipped with a single brake pedal or the pedal does not operate all the service brakes on the motor vehicle or combination of vehicles. (This does not prohibit use of an additional valve to operate the trailer brakes independently.)
5. Inspect all brake hoses, tubes and connecting lines. Look for proper support. Be sure lines are secure and cannot chafe on the frame, axles, exhaust system or other lines.	5. There is a break, crimp, or crack in any brake hose, line, tube or connection. Any line is not secured or is chafed by moving parts or in contact with the exhaust system.
Linings and Pads 6. Inspect for any broken or cracked drum brake linings or disc brake pads or parts of	6. Friction material is broken, cracked or not firmly and completely attached, or if

linings or pads which are not firmly attached. Also inspect for contamination and excessively uneven lining wear. (Amended 8/13/03)	friction surface is contaminated with oil, grease, etc., or if there is metal-to-metal contact or if the disc brake pad wear sensor is activated. (Amended 8/13/03)
7. Bonded drum linings. Measure the lining thickness at the thinnest point. (Amended 8/13/03)	7. Thinnest point is less than 1/8 ". (Amended 12/22/99)
8. Bolted or riveted drum linings. Inspect for loose or missing bolts or rivets. Measure lining's thickness. (Amended 8/13/03)	8. Any rivets or bolts are loose or missing. Lining is worn to less than 1/32" above a rivet or bolt head if bolt is less than 3/8" diameter bolt, minimum lining thickness must not be less than 5/16". Measurements should be taken at a point nearest the center of the shoe.
Drums and Rotors 9. Discs – Inspect discs for mechanical damage and cracks extending to the edge.	9. The disc is broken or has cracks on the friction surface extending to the open edge or if the mounting holes are elongated. (Heat check cracks not extending to the open edge may be ignored.)
10. Drums – Inspect friction surface for cracks extending to the open edge or drum, or if it has mechanical damage other than normal wear, or the surface is contaminated.	10. Drum has a crack on the friction surface extending to the open edge or on the outside of the drum, particularly at the drum mounting area. (Heat check cracks not extending to the open edge may be ignored.) There is evidence of mechanical damage other than normal wear, or the mounting holes are elongated or the friction surface is contaminated with grease, oil, etc.
Hydraulic Brake Systems 11. Inspect wheel cylinders, lines, connections and calipers for visible leakage.	11. Wheel cylinders, lines or calipers have visible leaks.
12. Inspect master cylinder for leakage and reservoir fluid level.	12. Master cylinder leaks or reservoir is not full to its designated capacity.
13. Test pedal reserve. While vehicle is stopped, depress brake pedal under normal foot pressure (if vehicle is equipped with power brakes, engine should be running for this test). Also, inspect for leakage under pressure.	13. Pedal reserve is less that 1/3 of the possible travel or manufacturer's specifications; brake pedal does not hold its position for at least 60 seconds without dropping; leaks are visible.

14. Power-assisted systems. With engine off, apply brakes several times to deplete reserve supply. Put foot on pedal and start engine.	14. Pedal does not drop slightly when engine starts.
Air Brake Systems 15. Inspect lines, valves, fittings and air chambers for leaks. **NOTE:** The following four conditions must be met before performing this test: - governor is cut-in; - reservoir pressure is between 80 and 90 Psi; - engine is at idle; and - service brakes are fully applied.	15. If the air pressure does not maintain between 80 and 90 psi. (Perform this test for 1 minute on single and/or combination vehicles).
16. Inspect air pressure safety relief valve. Inspect tension and condition of compressor drive belts. Check air intake cleaner.	16. Air pressure safety relief is not present or does not operate on systems which can be checked. (Some valves are designed with a lead plug which cannot be tested.) Compressor drive belt(s) are missing, badly worn, frayed or loose. Air compressor intake is clogged to the point of preventing proper air intake.
17. Air and vacuum warning system − gauges. Make a series of brake applications until low pressure warning signal operates.	17. Gauge is missing or inoperative. Vehicle is not equipped with either an audible or visible warning device to readily indicate to the driver the lack of sufficient assist to stop the vehicle. (A gauge does not satisfy this requirement.) Air System: Warning system does not provide a continuous warning once activated or does not activate when pressure drops: i. to manufacturer's specifications, if known, or ii. below 60 pounds per square inch (42.4 kg/sq cm), if manufacturer's specifications are unknown. Vacuum System: Warning system does not activate when the vacuum reservoir has less than eight inches of mercury.

Breakaway Systems 18. Inspect for presence of an emergency breakaway system on all trailers.	18. Trailer is not equipped with breakaway brakes which automatically apply upon separation from the towing vehicle.
19. Inspect for presence of a tractor protection valve on towing vehicles manufactured after June 30, 1953.	19. Vehicle is not equipped with an automatic breakaway system (tractor protection valve) so that the service brakes on the truck or tractor can still operate if the trailer separates. This valve must automatically operate within a pressure range of 20-45 psi (14.1 - 31.8 kg/sq cm). Where manual operation is permitted, this control shall be within easy reach of the driver.

(b) *Coupling Devices*.

Procedure	**Reject if:**
1. Pintle hooks A. Condition	A. -Cracks anywhere in pintle hooks assembly -Any welded repairs to the pintle hook. -Section reduction visible when coupled (see Note 1). (Amended 12/22/99).
NOTE 1: No part of the horn or hook (stationary part) should have any section reduced by more than 20 percent. If wear can be seen when the hook and eye are coupled, it is due to either this condition or the eye condition described in Note 2.	
B. Operation	B. Latch does not work
2. Drawbar/towbar Eye A. Condition i. Mounting ii. Integrity	i. -Any cracks in attachment welds -Any missing or ineffective fasteners ii. -Any cracks -Section reduction visible when coupled (see Note 2) (Amended 12/22/99)
NOTE 2: The eye should not be worn to beyond 20 percent of its original cross section thickness. If wear can be seen when the hook and eye are coupled, it is probable that either this condition or that described in NOTE 1 exists. (Amended 12/22/99)	
3. Drawbar/towbar tongue A. Condition B. Operation	A. Any cracks. B. Movement of 1/4 inch or more between subframe and drawbar at point of attachment.

4. Safety chains and cable A. Presence of safety chains	A. Missing
B. Condition i. Chains and hooks	i. -Worn to the extent of a measurable reduction in link cross section. -Incapable of secure attachment. -Improper repairs, including welding, wire, small bolts, rope and tape.
ii. Cable	ii. -Kinked or broken cable strands. -Incapable of secure attachment. -Improper clamps or clamping.

(c) *Exhaust system*.

Procedure	**Reject if:**
Exhaust system (Amended 9/1/04)	
1. Visually inspect for presence, condition and location of exhaust system.	1. Vehicle has no muffler, exhaust pipe, tail pipe or tail spout. Vehicle has gutted, altered or patched muffler. Vehicle has exhaust noise appreciably greater than mechanical noise of fan and valves. There is excessive vibration of exhaust line. There is leakage of exhaust gases at: a. Manifold gasket. b. Manifold and exhaust pipe gaskets. c. Muffler and muffler connection. d. Any point in exhaust pipe and tail pipe. Exhaust system is so located as would be likely to result in burning, charring or damaging the electric wiring, fuel supply or any combustible part of the vehicle. Exhaust system does not discharge to the atmosphere at a location to the rear of the cab (if the exhaust projects above the cab, it must be near the rear of the cab). Motor vehicles engaged in the transportation of inflammable liquids are excluded from the requirements of this provision. (Amended 1/23/08)

§ 79.24 Emissions inspection procedure (Repealed and New 1/23/08)

(a) *Applicability* – Except as exempted in section 79.2 of this Part, all motor vehicles registered in this State must pass both the appropriate emissions inspection and the appropriate safety inspection before any inspection certificate may be issued. This section describes the specific tests that are authorized and required under Section 301(d) of the Vehicle and Traffic Law, and 6 NYCRR Part 217. Vehicles subject to diesel emissions inspection (smoke opacity test) are subject to the procedures set forth in section 79.26 of this Part. (Amended 7/01/12)

(1) OBD II emissions inspection.

(i) All model-year 1996 and newer non-exempt vehicles (including all model year 1997 and newer non-exempt diesel-powered vehicles) that have a gross vehicle weight rating (GVWR) under 8,501 pounds, registered in any county in the State, except for vehicles with a make of "Custom" or "Homemade", are subject to the OBD II emissions inspection, in addition to the applicable safety inspection. (Amended 7/01/12)

(ii) Any official emissions inspection station may perform OBD II emissions inspections. (Amended 12/29/10)

(iii) An OBD II emissions inspection must be performed with appropriate CVIS equipment. (Amended 7/01/12)

(2) *Repealed 12/29/10.*

(3) Low enhanced emissions inspection.

(i) All non-exempt vehicles not subject to the OBD II emissions inspection, including those vehicles with a make of "Custom" or "Homemade", are subject to the low enhanced emissions inspection, in addition to any applicable safety inspection. Vehicles classified as "Custom" or "Homemade" are only subject to the requirements of section 79.24(i), item 8b. (Amended 12/29/10)

(ii) Any official emissions inspection station may perform low enhanced emissions inspections. (Amended 12/29/10)

(iii) All low enhanced emissions inspections must be performed with appropriate CVIS Equipment. (Amended 7/01/12)

(b) *Procedures*.

(1) OBD II emissions inspection.

(i) OBD II inspection procedure. All model year 1996 and newer non-exempt vehicles (including all model year 1997 and newer non-exempt diesel-powered vehicles) that have a gross vehicle weight rating (GVWR) under 8,501 pounds, in any county in the State, except for vehicles with a make of "Custom" or "Homemade," are subject to the OBD II emissions inspection. (Amended 7/01/12)

(ii) This procedure consists of entering the appropriate vehicle data, including the results of the safety inspection and the emissions control device check (subdivision (i), items 1-10 of this section, except that diesel-powered vehicles that are subject to the OBD II emissions inspection shall not be inspected for items 1 through 8b in subdivision (i) of this section) into the CVIS and communicating with the vehicle's OBD II system. The CVIS records the results of the test and prints the results. The inspection station must give the customer a copy of the printout. (Amended 7/01/12)

(iii) Specific instructions regarding the OBD II test procedure are found in the "NYVIP Vehicle Inspection System Operators Manual".

(2) *Repealed 12/29/10.*

(3) Low enhanced emissions.

(i) Low enhanced inspection procedure. All non-exempt vehicles not subject to the OBD II emissions inspection, including those vehicles with a make of "Custom" or "Homemade", are subject to this inspection. (Amended 12/29/10)

(ii) This test consists of entering the appropriate vehicle data, including the results of the safety inspection and the emissions control device check [subdivision (i), items 1-8b of this section. NOTE: Vehicles with a make of "Custom" or "Homemade" are subject to the requirements of subdivision (i), item 8b only of this section] into the CVIS. The CVIS records the results of the test and prints the results. The inspection station must give the customer a copy of the printout.

(iii) Specific, detailed instructions regarding the low enhanced inspection procedure are found in subdivision (i) of this section.

(c) *Repealed 12/29/10.*

(d) *Standards.*

(1) *Repealed 12/29/10.*

(2) OBD II Test.

(i) The New York State Department of Environmental Conservation, in consultation with the Department of Motor Vehicles, shall establish and modify periodically the standards for the OBD II inspection, including the weight standards to be used to determine the proper OBD II requirements and classifications.

(ii) Such standards shall include criteria established by the New York State Department of Environmental Conservation in 6 NYCRR Part 217.

(e) *General provisions*.

(1) Vehicles registered in this state. All non-exempt motor vehicles registered in this state are subject to either an OBD II or a low enhanced emissions inspection. All non-exempt

vehicles must pass the appropriate emissions inspection and the appropriate safety inspection before any inspection certificate may be issued. All non-exempt motor vehicles with a make of "Custom" or "Homemade" are subject to a low enhanced emissions inspection and must only pass the requirements of Section 79.24(i), item 8b. (Amended 12/29/10)

(2) Vehicles registered in another state. If a non-exempt motor vehicle with a registration from another state, or with a New York State registration with an out-of-state address, is presented for inspection at an official inspection station, the inspection station must perform the inspection procedure appropriate for the vehicle as if it were registered in the county where the inspection is to be performed, and shall issue the appropriate safety or safety/emissions inspection certificate if it passes the inspection.

(3) *Repealed 12/29/10.*

(f) *Effect of failure of emissions inspection*.

(1) OBD II inspection.

(i) Subject vehicles must pass the OBD II emissions inspection (which includes subdivision (i), items 1-10 of this section, except that diesel-powered vehicles that are subject to the OBD II emissions inspection shall not be inspected for items 1 through 8b in subdivision (i) of this section) and safety inspection in order for an inspection certificate to be issued. If the vehicle fails any portion of the inspection, the inspection station must give the motorist a CVIS-generated inspection receipt indicating the reason for failure. An inspection station cannot issue a certificate of inspection until appropriate repairs are made and the vehicle passes all applicable portions of the inspection, or, until the vehicle meets the conditions in section 79.25(a) of this Part and qualifies for an emissions waiver. (Amended 7/01/12)

(2) *Repealed 12/29/10.*

(3) Low enhanced inspection.

(i) An inspection station shall only issue an inspection certificate if the subject vehicle passes the low enhanced emissions inspection [subdivision (i), items 1-8 of this section] as well as the safety inspection. If the vehicle fails any portion of the inspection, the station must give the motorist a CVIS-generated inspection receipt indicating the reason for failure. A certificate of inspection cannot be issued until appropriate repairs are made and the vehicle passes all applicable portions of the inspection. Vehicles subject to the low enhanced inspection cannot qualify for an emissions waiver.

(g) *OBD II and low enhanced emissions inspection, reinspection and fees*.

(1) If a vehicle fails the safety portion and/or the emissions portion of the safety/emissions inspection, and is not removed from the station by the customer for repair, the station may not charge for reinspection of the vehicle. A test drive by station personnel for the purposes of diagnosis or verification of repair does not constitute removal from the station.

(2) If a vehicle fails both the safety portion and emissions portion of the safety/emissions inspection, is removed from the station by the customer for repair, and if the vehicle is presented for reinspection, that inspection station or any other emissions inspection station must conduct a full inspection of both the safety portion and emissions portion during the reinspection of the vehicle, and may charge a fee up to but not more than the applicable fee for the failed portions as set forth in section 79.7(c) of this Part.

(3) If a vehicle fails the safety portion or the emissions portion of the safety/emissions inspection, and is removed from the station by the customer for repair and if the vehicle is presented for reinspection within 30 days of the rejection, that inspection station or any other emissions inspection station must conduct a full inspection of only the failed safety or emissions portion during the reinspection of the vehicle, and may charge a fee up to but not more than the applicable fee for the failed portion as set forth in section 79.7(c) of this Part.

(4) If a vehicle fails the safety portion or emissions portion of the safety/emissions inspection, and is removed from the station by the customer for repair and if the vehicle is presented for reinspection more than 30 days after rejection, that inspection station or any other emissions inspection station must conduct a full inspection of both the safety portion and emissions portion during the reinspection of the vehicle, and may charge a fee up to but not more than the applicable fee for the safety portion and emissions portion as set forth in section 79.7(c) of this Part.

(h) *Repealed 12/29/10.*

(i) *Emissions control devices*.

The following items must be inspected on vehicles subject to a low enhanced or OBD II emissions inspection, except that diesel-powered vehicles that are subject to the OBD II emissions inspection shall not be inspected for items 1 through 8b. A vehicle must be inspected only for the items with which it was originally equipped by the manufacturer. Vehicles classified as "Homemade" or "Custom" on the certificate of registration are only subject to the gas cap inspection/test described in item number 8b: (Amended 7/01/12)

Procedure	**Reject if:**
Positive Crankcase Ventilation (PCV) System 1. Presence of PCV system for 25 model years old and newer vehicles.	1. The PCV system is missing or disconnected.
Catalytic Converter 2. Presence of the catalytic converter for 25 model years old and newer vehicles. Check to determine that the air supply is connected to the converter when applicable.	2. The catalytic converter is disconnected or removed. The air supply to the converter is disconnected or removed.

Fuel Inlet Restrictor 3. For 25 model years old and newer vehicles, check the fuel inlet pipe to determine that the restrictor is in the location for which it was designed. (Amended 12/29/10) (The door that covers the hole for the fuel nozzle is not required to be in place).	3. The restrictor is missing; has been bent back against the filler pipe; or has been altered in a way that will allow the introduction of a larger "leaded fuel" nozzle.
Exhaust Gas Recirculator Valve (EGR) 4. For 25 model years old and newer, secure mounting of the EGR valve and proper connection of hoses.	4. The EGR valve is removed. The vacuum hoses are disconnected or removed. Any visible electrical connector to the EGR, or any visible component of the EGR system, is disconnected or removed.
Thermostatic Air Cleaner (TAC) 5. For 25 model years old and newer vehicles, check for proper placement of the thermostatic air cleaner. (Amended 12/29/10)	5. The unit is missing. Holes have been drilled or punched in the air cleaner. Vacuum lines are disconnected or missing. Manifold heat pipe is disconnected or missing.
Air Injection System (AIR) 6. For 25 model years old and newer vehicles, check for presence of originally designed air injection system. (Amended 12/29/10)	6. The air pump, if the vehicle was originally equipped with one, is disconnected or removed. The drive belt is removed. The air hoses and/or pipes are disconnected or removed. The diverter valve is disconnected or removed.
Evaporative Emission Control (EVAP) 7. For 25 model years old and newer vehicles, check the fuel evaporation control system. (Amended 12/29/10)	7. The canister is removed or the hoses are disconnected or removed.

Gas Cap 8a. *Repealed 12/29/10.* 8b. Vehicles subject to the low enhanced emissions inspection or OBD II emissions inspection. All non-exempt vehicles including vehicles with a make of "Custom" or "Homemade", the vehicle gas cap shall be present and shall be visually checked for condition, as directed by the CVIS software. (Amended 12/29/10)	8a. *Repealed 12/29/10.* 8b. Gas cap is missing, broken or cracked.
OBD II	
9a. Operation of MIL. All non-exempt vehicles subject to the OBD II test, except for vehicles with a make of "Custom" or "Homemade", shall be checked for the operation and activation of the on-board diagnostic malfunction indicator light (MIL), as per EPA and DEC requirements.	9a. The MIL fails to light with the key on and engine off. The MIL remains lit with the engine running.
9b. OBD II eligible vehicles as per above in "9a".	9b. The MIL is commanded on by the OBD II system.
10. All non-exempt vehicles subject to the OBD II test, except for vehicles with a make of "Custom" or "Homemade", shall be checked for the operation and activation of the vehicle's OBD II system monitors, as per EPA and DEC requirements. These monitors are manufacturer specific and include but are not limited to: the comprehensive component monitor, the misfire monitor, the fuel monitor, the oxygen sensor monitor, the catalyst monitor, the EGR monitor, the EVAP monitor, the heated catalyst monitor, the A/C system refrigerant monitor, the heated O2 sensor monitor and the secondary AIR monitor.	10. The number of monitors that the CVIS determines to be "not ready" exceeds the maximum allowable as calculated by NYS DEC, or by EPA mandate.
11. All non-exempt vehicles subject to the OBD II test, except for vehicles with a make of "Custom" or "Homemade", shall be checked for proper operation of the OBD II system by communicating with the CVIS, as per DEC requirements.	11. The NYVIP CVIS is unable to communicate with the OBD II computer in the vehicle.

(j) Advisory emissions scan. Any vehicle required to be equipped with an OBD system that is exempt from the OBD II emissions inspection under 79.2(f)(4), and is inspected at an inspection station owned and/or operated by a registered new motor vehicle dealer, is required to have an advisory emissions scan completed during the inspection. The advisory scan will be completed using the NYVIP CVIS. No results will be reported to the consumer and such consumer shall not be charged a fee for the advisory emissions scan. (Added 7/13/11)

§ 79.25 OBD II emissions inspection waiver. (Amended 12/29/10)

(a) If a vehicle fails, after proper repair, the reinspection of the emissions portion, a certificate of inspection must be offered by the official Emissions Inspection Station if all of the following conditions are met: (Amended 9/1/04)

(1) The safety inspection has been passed.

(2) All emissions control devices have passed inspection. The cost for replacement of missing emissions control devices, safety items or warranty repairs does not count towards the emissions waiver cost limits. (Amended 8/13/03)

(3) Repairs and adjustments have been properly made and documented and cost at least $450, based on the cost of such repairs if performed in 1989. Provided, however, that the waiver amount will be adjusted to account for increases in the Consumer Price Index (CPI) since January 1989 and will be adjusted each year in accordance with the CPI. (Amended 9/1/04)

(b) If all of the above conditions are met, the CVIS will allow the inspector to issue an inspection certificate for the vehicle. When issuing a "Safety/Emissions" sticker (VS-1082SE), the inspector must check the "Repair Waiver Issued" box on the reverse side of the sticker and punch the appropriate expiration month. The appropriate CVIS will print a waiver certification form that must be filled out by the station, and signed by both the customer and the certified inspector. The station must attach the following documentation to the waiver certification form: copies of invoices and receipts for all of the diagnostic and repair work performed and used to qualify for the waiver; and copies of all vehicle inspection receipts for the initial emissions inspection failure and all subsequent emissions inspection failures. This documentation must be kept by the station for two years for possible review by NYS. (Amended 7/01/12)

(c) The commissioner or an agent of the commissioner reserves the right to inspect a vehicle before or after the waiver is issued to verify that proper repairs have been made and have been documented, including documentation of diagnosis procedures. The repair cost must meet the minimum waiver cost as calculated in section 79.25(a)(3). Repairs made to qualify for the waiver must address the reason for the emissions failure and follow acknowledged industry standards for diagnosis and repair. (Amended 9/1/04)

(d) Official Fleet Inspection Stations (see section 79.15) may only apply the cost of parts towards a waiver; no labor may be applied. All diagnoses and repairs must be documented, as described in subdivision (c) of this section. (Added 1/23/08; Amended 9/24/08

(e) Vehicles sold by a dealer that must be inspected prior to delivery are not eligible for a waiver. (Added 1/23/08)

§ 79.26 Vehicles subject to diesel emissions inspection.

(a) *Applicability.*

(1) All non-exempt diesel powered motor vehicles, that have a maximum gross weight (MGW) over 8,500 pounds, are registered in the NYMA, and are not subject to the OBD II emissions inspection, are subject to a test of the vehicle exhaust emissions (smoke opacity test) as part of the annual vehicle inspection. A vehicle required to have an exhaust emissions inspection under these regulations may be inspected only at an official diesel emissions inspection station. No other classification of inspection station may conduct inspections for vehicles requiring diesel emissions inspection unless a temporary certificate of emissions waiver (form VS-1078) has been issued for the vehicle and is presented to the inspection station. Upon the vehicle's re-entry into the NYMA, a complete diesel safety/emissions inspection must be performed. (Amended 7/01/12)

(2) Non-NYMA –

(i) All diesel powered motor vehicles that have a maximum gross weight (MGW) over 8,500 pounds, and that are registered outside the NYMA are exempt from the Diesel Emissions Inspection. If the vehicle is not subject to an OBD II emissions inspection, the motorist may request a diesel emissions inspection (smoke opacity test) by presenting the vehicle to an Official Diesel Emissions Inspection Station and requesting the inspection. (Added 7/01/12)

(ii) If a nonexempt diesel-powered vehicle that has a maximum gross weight (MGW) over 8,500 pounds with a registration from another state, or with a New York State registration with an out-of-state address, is presented for inspection in the NYMA, the vehicle must receive a safety and diesel emissions inspection (smoke opacity test), and must be issued a diesel safety/emissions inspection certificate if it passes the inspection unless the vehicle is subject to an OBD II emissions inspection. (Amended 7/01/12)

(b) *Pre-emission inspection check.*

(1) Each vehicle subject to the diesel emissions (smoke opacity) test will first be visually inspected for the following conditions: (Amended 7/01/12)

(i) Exhaust System – missing section or holes which would prohibit collection of exhaust sample. (Amended 8/13/03)

(ii) If the vehicle was originally equipped with a governor, determine that it is not missing, disconnected, or malfunctioning.

(2) Vehicles found having any of the conditions set forth in paragraph 1 of this subdivision shall not be inspected. This refusal shall not constitute an inspection, no inspection fee shall be charged, and the station shall instruct the motorist that the vehicle must be returned in a repaired condition in order for an inspection to be performed.

(c) *Standards.*

(1) The New York State Department of Environmental Conservation in consultation with the Department of Motor Vehicles shall establish and modify periodically the standards of diesel emissions allowable in the exhaust emissions of vehicles subject to the diesel exhaust emissions (smoke opacity) test.

(2) The test limits established by the New York State Department of Environmental Conservation in 6 NYCRR Part 217 must be used when performing a diesel emissions (smoke opacity) test. (Amended 7/01/12)

(d) *Diesel emissions test procedure.* Subject vehicles registered in the NYMA will receive this test. The test will, in general, consist of entering appropriate vehicle data onto the form VS-1074SD, and obtaining a sample of the vehicle's exhaust per the equipment manufacturer's instructions. The system will measure the exhaust particulates and indicate if the vehicle has passed or failed the emissions test. The system will print out the results and a copy of the print out must be given to the customer. The inspection station must also retain a copy of the test results, which will be attached to the Motor Vehicle Inspection Record (VS-1074SD). An emissions test will be considered invalid if the vehicle inspection system indicates an invalid test reading. In addition, vehicles subject to the diesel emissions inspection are also subject to the procedures in subdivision (g) of this section. (Amended 8/13/03)

(e) *Effect of failure of diesel emissions test.* Subject vehicles must pass the safety inspection and the emissions test in order for any inspection certificate to be issued. If the vehicle fails to pass either the emissions test or the safety inspection, or combination, an inspection rejection notice must be given to the operator. A certificate of inspection cannot be issued until appropriate repairs are made to reduce the exhaust emissions level to within the test limits or until appropriate repairs are made to the failed safety inspection items or both or until it qualifies for a diesel emissions waiver (VS-1079DE). The cost to repair safety items does not count towards the emissions waiver cost limit. (Amended 8/13/03)

(f) *Diesel emissions reinspection procedure and fees.* If a vehicle fails a safety and/or diesel emissions inspection, and is not removed from the station for repair, there shall be no charge for reinspection of such vehicle. If a vehicle fails both the safety and diesel emissions portions of the inspection, and is removed from the inspection station for repairs, that inspection station or any other inspection station must conduct a full inspection during the reinspection of the vehicle. If a vehicle fails the safety portion of an inspection but passes the diesel emissions portion, and is removed from the inspection station for repairs, and is brought back to the same inspection station within 30 days, the inspection station shall conduct only the safety portion of the inspection and must charge only the safety portion of the inspection fee as set forth in section 79.7(c) of this Part. If a vehicle passes the safety portion of the inspection but fails the diesel emissions portion, and is removed from the inspection station for repairs, and is brought to the same inspection station within thirty days, the inspection station shall conduct only the diesel emissions portion of the inspection and must charge only the diesel emissions portion of the inspection fee as set forth in section 79.7(c) of this Part. An inspection station to which a vehicle is presented for reinspection more than 30 days after rejection must perform a full inspection. If a vehicle is presented for reinspection to a station other than the station that rejected the vehicle, a full inspection must be performed.

(g) *Emissions control devices*. Vehicles subject to the diesel emissions inspection program must be inspected for the presence and condition of devices designed to control diesel emissions. The vehicle must be rejected if any such device is missing, disconnected, or disabled. The certified motor vehicle inspector shall inspect those emissions control devices that the motor vehicle was originally equipped with by the manufacturer, and those emissions control devices that have been retrofitted into the motor vehicle in accordance with state or federal laws or regulations. (Amended 7/01/12)

(h) *Diesel emissions inspection waiver*.

(1) If a vehicle fails, after proper repair, the reinspection of the emissions portion, a Certificate of Inspection must be offered by the official Diesel Emissions Inspection Station if all of the following conditions are met:

(i) The safety inspection has been passed.

(ii) All emissions control devices have passed inspection. The cost for replacement of missing emissions control devices or warranty repairs does not count towards the emissions waiver cost limits. The cost to repair safety items does not count towards the emissions waiver cost limit.

(iii) Emissions repairs and adjustments have been properly made and documented and the cost equals or exceeds the value contained in the table below for the proper Maximum Gross Weight (MGW) category. The waiver amounts in the table may be adjusted to account for increases in the Consumer Price Index (CPI). (Amended 8/13/03)

Minimum Hardship Waiver Repair Costs by MGW (Amended 8/13/03)	
MGW	**Minimum Repair Cost for Waiver**
8,501 to 18,000 lbs	$1000
18,001 to 26,000 lbs	$2000
Over 26,000 lbs	$4000

(2) If all of the above conditions are met, the inspector will be allowed to issue the inspection certificate(s) for the vehicle. Check the "Repair Waiver Issued" box on the reverse side of the "Safety/Diesel Emissions" sticker (VS-1082D) and punch the appropriate expiration month. The inspector must fill out a Diesel Emission Inspection Certification and Waiver Form (VS-1079DE), and that form, along with copies of the repair invoices verifying that the required repairs have been performed, must be retained by the station for a period of two years. Copies of all the above documents and a copy of form VS-1079DE must be mailed to the Department of Environmental Conservation (DEC) at the address on the form within three days of issuing the waiver. (Amended 1/23/08)

(3) The commissioner or an agent of the commissioner reserves the right to inspect a vehicle before or after the waiver is issued to verify that proper repairs have been made and the costs have been documented.

§ 79.27 Heavy vehicle inspection.

This section comprises the safety inspection or the safety portion of a safety and emissions inspection for all motor vehicles that have a seating capacity, as indicated on the vehicle registration certificate, over fourteen passengers; all motor vehicles and trailers that have an MGW, as indicated on the vehicle registration certificate, over 18,000 pounds; those motor vehicles and trailers that have an MGW, as indicated on the vehicle registration certificate, over 10,000 pounds and under 18,001 pounds, when the registrant requests a heavy vehicle inspection; and all semi-trailers. (Amended 12/29/10)

NOTE 1: Any additional axle or axles (tag axles) on a vehicle must be inspected in the road position.

(a) *Tires* **(**Amended 1/23/08)

Inspect for:	**Reject if:**
1. Approved type	1. Any tire: -is not DOT approved; -is marked for restricted use such as: -for farm use only; -for temporary use; -not for highway use, or other marking having like meaning; (Added 1/23/08) -excluded from use on a steering axle; or (Added 1/23/08) -the tire size designation is proceeded by a "T". No bus may have a recapped, retread or regrooved tire on the steering axle.
2. Condition A. Casing	A. Any tire: -is in contact with body or frame of vehicle; (Added 1/23/08) -is flat; -has a fabric break or cut to the extent that the ply or cord is exposed; (Amended 1/23/08) -has a bump, bulge or knot indicating partial failure of the tire structure; -has been repaired with a boot or blowout patch; or -shows tread or recap separation. (Added 1/23/08)
B. Tread − All tread measurements must be taken in the two adjacent major tread grooves showing the most wear. i. Front steering axle tires ii. Other Tires	B. Tread On: i. Any front steering axle tire: -is regrooved; -has less than 4/32" tread. ii. Any other tire has less than 2/32" tread.
C. Valve Stem	C. The valve stem is: -cracked;

	-chafed from contact with the spider or rim; -in contact with brake drum; -inaccessible for taking pressure readings.
D. Tire Pressure (Added 9/1/04) Check tire pressure.	D. Advise customer if tire pressure is not within range recommended by vehicle manufacturer. (Added 9/1/04) **NOTE:** Tire pressure check is an advisory only; do not reject the vehicle. The customer must be notified in writing.

(b) *Wheels or rims* (Amended 1/23/08)

1. Condition A. Rim or wheel	A. The rim or wheel: (Amended 1/23/08) -and lock ring are mismatched; -is cracked; -is bent; -is sprung; -has other damage; -shows evidence of slippage on the spider; -stud holes are elongated; (Added 1/23/08) -clamps are missing or damaged; or (Added 1/23/08) -welded repairs have been made. (Added 1/23/08)
B. Mounting (bolts, nuts or studs)	B. Any fastener is: -broken; -missing; -damaged; -loose.

(c) *Steering* (Amended 1/23/08)

Inspect for:	**Reject if:**
1. Steering wheel free play A. Operation **NOTE:** Power steering fluid must be full, the belt must be tight, and the engine running.	A. Power steering wheel has more than 30 degrees of free play or exceeds the movement listed as follows: **Wheel Size** — **Movement** 16 in. or less — 4 ½ in. (11.5 cm) 18 in. — 4 3/4 in. (12.0 cm)

	20 in. 5 1/4 in. (13.5 cm) 22 in. 5 3/4 in. (14.5 cm) B. Manual steering has more than 15 degrees of free play or exceeds the movement listed as follows: **Wheel Size** **Movement** 16 in. or less 2 in. (5.1 cm) 18 in. 2 1/4 in. (5.4 cm) 20 in. 2 1/2 in. (6.4 cm) 22 in. 2 3/4 in. (7.0 cm) C. Steering wheel is not properly secured. (Added 1/23/08)
2. Power Steering Unit A. Operation B. Condition	A. The power steering system does not work. B. The power steering system: -has visible leaks; -hoses are chafed; -belt(s) are missing, loose, frayed, or bind or contact other objects. (Amended 1/23/08)

(d) *Front end* (Amended 1/23/08)

Inspect for:	**Reject if**
1. Condition	1. Axle is bent. 2. There is excessive looseness in any of the following parts: -king pins and/or bushings; -wheel bearings; -upper or lower cross shaft mounting or bushings; -idler arm; -pitman/steering arm; -center control arms; -tie rod ends; -drag link ends; -gear box; -gear box mounting is loose, bolts are missing, or bolts or case are cracked; (Amended 1/23/08) -rack mounting; -steering wheel shaft mounting; -steering shaft coupler/universal is: binding; frayed; cracked. -steering damper:

	leaks; is loose; mount is cracked/broken; is missing. -worn universal joints; (Added 1/23/08) -bearing cap broken or missing; (Added 1/23/08) -any cracks or welded repairs in the Above items. (Added 1/23/08)

(e) *Suspension* (Amended 1/23/08)

Inspect for:	**Reject if:**
1. Springs A. Presence B. Condition C. Trailer adjustable axle	 A. Any spring is missing. B. A spring: -is noticeably sagging; -is broken; -center bolt is broken; -shackle is excessively worn or loose; -eye or pin bolt is broken/missing; -composite spring cracked more than 3/4 of an inch in any direction; (Added 1/23/08) -any leaf or portion of any leaf in any spring assembly is missing or separated. (Added 1/23/08) C. Adjustable axle assemblies (sliding subframes) assembly locking pins are missing or not engaged. (Added 1/23/08)
2. Torsion bars, stabilizer bars and torque rods A. Presence B. Condition	 A. Any torque rod torsion or stabilizer bar is missing. B. Torque rod torsion or stabilizer bar is: -broken; -disconnected; -missing; -bent; -excessively loose.
3. Air suspension A. Presence B. Condition	 A. Any air bag is missing B. Any air bag is: -chafed; -damaged; or -leaking

4. Shock absorbers A. Presence B. Condition	A. A shock is on one side but not the other, or shock absorbers are missing on a vehicle that was originally equipped with them. (Amended 8/13/03) B. Any shock: -is broken -has a loose or broken mount or mounting bolt. (Amended 8/13/03) (A leaking shock is not cause for rejection.)

(f) *Chassis/Frame*

Inspect for:	**Reject if:**
1. Presence 2. Condition	1. Section is missing. 2. The frame is: -cracked; -bent; -broken; -deteriorated due to rust.

(g) *Window glass*

Inspect for:	**Reject if:**
1. Windshield A. Presence B. Approved Type C. Condition	A. The vehicle is not equipped with a windshield. B. Any 1935 or newer vehicle's windshield is not AS-1, AS-10 or AS-14 rated safety glass. (Amended 8/13/03) C. i. The windshield has a "star" larger than 3 inches in diameter. (A star is considered to be a bruise from which multiple cracks extend, such as a "stone bruise", shot, etc.). ii. There is a crack more than 11 inches long, any part of which extends into the path of the windshield wipers.(Amended 8/13/03) iii. There are any sharp or jagged edges.
2. Other glass A. Approved type	A. i. The windows to the immediate left and right of the driver are not AS-1, 2, 8, 10 or rated safety glass. (Amended 8/13/03) ii. Any other windows do not have safety glass or rigid plastic with an AS-1, 2, 3, 4, 5, 8, 10 or 11 rating. (Amended 8/13/03)

B. Condition	B i. Any window is broken or has exposed sharp or jagged edges. ii. Any window is cracked, starred, scratched or discolored so as to obstruct driver's vision.

3. Window Tint **NOTE:** If a windshield or a window, through observation, clearly meets the required visible light transmittance standard, it is not necessary to use the tint meter. Vehicles displaying a valid MV-80W.2 "Exempt Tinted Windows" sticker need not be inspected for window tint. Model year 1991 or older vehicles:	
(a) Inspect the windshield for proper visible light transmittance.	(a) Any part of the windshield below the top 6 inches allows less than 35% visible light transmittance.
(b) Inspect all side windows adjacent to or forward of the driver's seating position for proper visible light transmittance.	(b) Any part of the window allows less than 35% visible light transmittance.
(c) Inspect the rear window of any vehicle that is not equipped with dual outside rearview mirrors for proper visible light transmittance.	(c) Any part of the rear window allows less than 35% visible light transmittance.
Model year 1992 or newer vehicles:	
(d) Inspect the windshield for proper visible light transmittance.	(d) Any part of the windshield below the top 6 inches allows less than 70% visible light transmittance.
(e) Inspect all side windows adjacent to or forward of the driver's seating position for proper visible light transmittance.	(e) Any part of any side window adjacent to or forward of the driver's seating position allows less than 70 % light transmittance.
(f) Inspect the rear window of any vehicle that is not equipped with dual outside rearview mirrors for proper visible light transmittance.	(f) Any part of the rear window allows less than 70% visible light transmittance.

(h) *Windshield wipers*

Inspect for:	**Reject if:**
1. Presence	1. Vehicle is not equipped with the number of wiper(s) with which it was originally manufactured.
2. Condition	2. Any wiper blade(s) have: -torn rubber; -material other than the rubber wiper blade in contact with the windshield. (Amended 8/13/03)
3. Operation	A. Any wiper controls are located beyond the reach of the driver so that they cannot easily be operated without moving from normal driving position. B. Any wiper does not work. C. Wiper does not operate freely. D. Any wiper is improperly adjusted.

(i) *Mirrors*

Inspect for:	**Reject if:**
1. Presence **NOTE:** Inspection of an interior, rearview mirror is not necessary.	1. Either the right or left exterior rearview mirror is missing.
2. Condition	2. Any mirror is cracked, broken or discolored.
3. Operation	A. Any mirror is not securely mounted. B. Any mirror cannot be adjusted. C. Any mirror will not maintain a set adjustment.

(j) *Horn*

Inspect for:	**Reject if:**
1. Presence	1. The vehicle does not have a horn.
2. Condition	2. The horn is not securely mounted.
3. Operation	A. The horn does not work. (Amended 12/22/99) B. The control is not within easy reach of the driver.

(k) *Coupling devices* (Amended 1/23/08)

Inspect for:	**Reject if:**
1. Fifth wheels A. Condition i. Mounting to frame ii. Mounting plates and pivot brackets iii. Sliders iv. Upper/lower coupler	A. More than 20 percent of fasteners, per side, missing or ineffective. i. -Any movement between mounting components and frame. (Amended 1/23/08) -Any mounting angle iron cracked or broken (see **NOTE 2**.) ii. -More than 20 percent of the fasteners, per side, are missing or ineffective. -Any weld or parent metal is cracked (see **NOTE 2**). -More than ¼ inch horizontal movement between pivot bracket pin and bracket. (Amended 1/23/08) -Pivot bracket pin missing or not secured. iii. -More than 25 percent of latching fasteners, per side, ineffective. -Any fore or aft stop is missing or not securely attached. -Movement more than 3/8 inches between slider bracket and slider base. -Any slider component has a Crack In parent metal or weld (see **NOTE 2**). iv. -Horizontal movement between the upper and lower fifth wheel halves exceeds ½ inch. -Operating handle will not stay in the closed or locked position. -Kingpin cannot be properly engaged. -Kingpin can be moved by hand in Any direction. (Added 1/23/08) -Separation between upper and lower coupler allowing light to show through from side to side.

	Any semi trailer with a bolted upper coupler having fewer effective bolts than shown in the following table. (Added 1/23/08) MINIMUM TOTAL QUANTITY OF BOLTS. (Total minimum quantity of bolts must be equally divided with 1/2 on each side of coupler) (Added 1/23/08) BOLT SIZE 1/2 in (13mm) 5/8 in (16mm) or larger 10-(5 each side) 8-(4 each side) (Added 1/23/08) -Cracks in the fifth wheel plate. -Locking mechanism parts missing, broken, or deformed to the extent that the kingpin is not securely held.
NOTE 2: Any repair weld cracking, well defined (especially open) cracks in stress or load bearing areas, cracks through 20 percent or more of original welds or parent metal are grounds for rejection except: -Cracks in fifth wheel approach ramps. -Casting shrinkage cracks in the ribs of the body of a cast fifth wheel.	
B. Operation i. Slider (power or manual).	i. -Ineffective latching mechanism. -Missing or ineffective stop. -Movement of more than ¼ inch between slider and housing. -Any leaking, air or hydraulic cylinders hoses, or chambers (other than slight oil weeping normal with hydraulic seals).
2. Pintle hooks A. Condition	A. -Cracks anywhere in pintle hook assembly. -Any welded repairs to the pintle hook. -Excessively worn (see **NOTE 3**).
NOTE 3: No part of the horn or hook (stationary part) should have any section reduced by more than 20 percent. If wear can be seen when the hook and eye are coupled, it is due to either this condition or the eye condition described in **NOTE 4**.	
B. Operation	Latch does not work.
3. Drawbar/towbar eye A. Condition i. Mounting ii. Integrity	i. -Any cracks in attachment welds. -Any missing or ineffective fasteners. ii. -Any welded repairs. (Added 1/23/08) -Any cracks. -Excessively worn (see **NOTE 4**).
NOTE 4: The eye should not be worn to beyond 20 percent of its original cross section thickness. If wear can be seen when the hook and eye are coupled, it is due to either this condition or that described in **NOTE 3**.	

4. Drawbar/towbar tongue A. Condition B. Operation	A. Any cracks. B. Movement of 1/4 inch or more between subframe and drawbar at point of attachment. Ineffective latching mechanism. (Added 1/23/08) Missing or ineffective stop. Added 1/23/08) Movement of more than 1/4 inch (6mm) between the slider and housing. Added 1/23/08) Any leaking air or hydraulic cylinders, hoses, or chambers (other than slight oil weeping normal with hydraulic seals). Added 1/23/08)
5. Safety chains and cable A. Presence of safety chains B. Condition i. Chains and hooks ii. Cable (Added 12/22/99)	A. Missing B. i. -Worn to the extent of a measurable reduction in link cross section. -Incapable of secure attachment. -Improper repairs, including welding, wire, small bolts, rope or tape. ii. -Kinked or broken cable strands. -Incapable of secure attachment. (Added 12/22/99) -Improper clamps or clamping. (Added 12/22/99)
6. Full trailer (double ring, ball-bearing turntable) (Added 1/23/08) Mounting - top and bottom Wear	Top or bottom flange has less than 6 effective bolts. Twenty percent or more of original welds (or repaired original welds), or parent metal, is cracked. Upper flange half touching lower flange half. Cracked flanges.

(l) *Exhaust system* (Amended 1/23/08)

Inspect for:	**Reject if:**
1. Presence	A. Vehicle does not have either a muffler or turbocharger.

	B. Exhaust discharge does not meet the following criteria: (Amended 1/23/08) i. discharges either to the rear or above the cab. ii. gasoline engine powered buses – discharge may not be more than 6 inches forward from the rear most part of the vehicle; (Amended 1/23/08) iii. buses powered by other than gasoline engine – discharge may not be more than 15 inches forward of the rearmost part of the vehicle, or must be to the rear of all doors or windows designed to be open, except windows designed to be opened solely as emergency exits. (Added 1/23/08)
2. Condition	A. Vehicle has gutted, altered or patched muffler. B. The exhaust system is excessively loose. C. Exhaust gases leak at: -the manifold gasket -the muffler -any other point in exhaust system (except on tilt cabs where pipe is attached to cab) D. Exhaust system is so located as it would be likely to result in burning, charring or damaging the electric wiring, fuel system, or any other combustible part of the vehicle.

(m) *Lighting and reflectors* (A lighting device may perform more than one function) (Amended 1/23/08)

Inspect for:	**Reject if:**
1. Headlights A. Presence	A. Any motor vehicle does not have headlights. (Not required for trailers) (Amended 1/23/08)
B. Approved type	B. i. A headlight or the headlight system does not meet SAE or DOT standards. ii. Any headlamp has an unapproved material over or in front of the lens. (Amended 8/13/03)
C. Condition	C.i. Any lens is broken (pieces missing). ii. Any headlamp is not securely mounted or can easily be moved.
D. Operation	D. Any headlamp fails to light in the high or low beam switch position.

2. Taillights/stop lights A. Presence	A. The vehicle is not equipped with at least two red tail lamps and at least two red stop lamps. (Amended 8/13/03)
B. Approved type	B. Lamps do not display required DOT or SAE markings. (Amended 8/13/03)
C. Condition	C.i. Any lamp/lens is broken (pieces missing). Tape or other material is used in place of all or part of an approved lens. ii. Any lamp is not securely mounted.
D. Operation	D. Any lamp does not operate properly in all switch position. (Amended 1/23/08)
3. Directional lights/hazard warning lights/indicator lights. (Amended 8/13/03) A. Presence	A.i. Any 1953 and newer vehicle is not equipped with directional lamps. Front directional signals are not required on trailers. (Amended 1/23/08) ii. Any 1966 and newer motor vehicle is not equipped with hazard warning lights. iii. Any vehicle equipped with directional signals must also be equipped with indicator lights. (Added 8/13/03)
B. Approved type	B.i. Any lamp does not display required DOT or SAE markings. (Amended 8/13/03) ii. Front lights do not display amber; rear lights do not display red or amber.
C. Condition	C.i. Any lamp/lens is broken (pieces missing). Tape or other material is used in place of all or part of an approved lens. ii. Any lamp is not securely mounted.
D. Operation	D.i. Any lamp does not operate properly in all switch positions. ii. Lamps are not visible front or rear. iii. Any switch must be manually held for the desired function. iv. Hazard warning lights do not operate with ignition off. v. Interior indicator lamp does not function properly. (If vehicle has an exterior indicator lamp only, check for proper operation). (Added 8/13/03)
4. Marker/clearance lights and reflectors (see **NOTE 5**).	

A. Presence	A.i. Side marker lights are not as follows: On each SIDE: - 1 red to the rear - 1 amber to the front - 1 amber in center if over 30 feet long ii. Clearance lights indicating overall width are not as follows: - 2 red showing to the rear - 2 amber showing to the front iii. Identification lamp (3-lamp cluster) at center of vehicle over 80 inches in width is not as follows: - amber on the front (except trailers) - red on the rear iv. Reflex reflectors are not as follows: On the REAR at the same height: - 2 red one on each side On each SIDE: - 1 amber to the front - 1 red to the rear
NOTE 5: Tractors do not need rear side marking devices, rear clearance lamps, or rear 3-lamp cluster.	
B. Approved type	B. Lamps or reflectors do not display required SAE or DOT markings. (Amended 8/13/03)
C. Condition	C .i. Any lens is broken (pieces missing). Tape or other material is used in place of all or part of an approved lens. ii. Any device is not securely mounted.
D. Operation	D. Any lamp fails to light properly when activated by the switch. (Amended 12/22/99)
5. Backup lights A. Presence	A. Any 1969 and newer motorized vehicle does not have at least one backup light. (Not required on trailers). (Amended 1/23/08)
B. Approved type	B. Backup light(s) is not SAE or DOT approved.
C. Condition	C. i. Any lens is broken (pieces missing). Tape or other material is used in place of all or part of an approved lens. ii. Any lamp is not securely mounted.
D. Operation	D. Any backup light fails to operate properly.
6. License plate lights (Added 8/13/03) A. Presence	A. Any vehicle does not have at least one

	lamp to illuminate the rear license plate. (Added 8/13/03)
B. Approved type (Added 8/13/03)	B. Lamps or reflectors do not display required SAE or DOT markings. (Added 8/13/03)
C. Condition	C. i. Any lens is broken (pieces missing). Tape or other material is used in place of all or part of an approved lens. (Added 8/13/03) ii. Any device is not securely mounted. (Added 8/13/03)
D. Operation (Added 8/13/03)	D. Any lamp fails to light properly when activated by the switch. (Added 8/13/03)

(n) *Service brake system***.** For brake inspection, EITHER: (Amended 1/23/08)

(1) Remove at least one rearmost drive axle brake drum or hub and drum assembly on a power unit or one rearmost brake drum or hub and drum assembly on a trailer or semi-trailer, **OR**

(2) On vehicles with removable backing plates, remove all of the plates or look through the inspection ports so that brake components can be viewed. (If the front axle is the only axle without removable backing plates, it is not necessary to remove a front brake drum or hub and drum assembly).

A new vehicle with a "Manufacturer's Certificate of Origin" (MCO), except a glider kit, as its ownership document is not required to be disassembled for brake component inspection.

On vehicles which require the wheel to be removed the "grease seal" SHOULD be replaced along with any other unserviceable parts required to insure safe operation upon re-assembly. These repairs must be authorized by the owner/operator. Once a vehicle is REJECTED, it is the owner/operator's responsibility to timely remove that vehicle from the facility at his/her own expense.

Inspect for:	**Reject if:**
1. Hydraulic or electric brakes A. Presence	A. There is a missing or disconnected brake on any wheel except for the following: 1980 and older trucks and tractors which have three or more factory equipped axles, in some cases may not have brakes on the front axle. These vehicles should not be rejected unless there is evidence that front brakes ever existed (i.e., drums, rotors or backing plate assemblies are present).

B. Condition i. Hoses, connections and lines	i. Any brake hose or connecting line is: -cracked -broken -crimped -swelled or swollen -not securely fastened -charred -chafed -leaking -in contact with the exhaust system or driveline -using copper tubing or compression fittings (Added 9/1/04) -exhibiting improperly joined lines, such as a splice made by sliding the hose over a piece of tubing and clamping the hose to the tube. (Added 1/23/08)
ii. Brake lining (Added 12/22/99) a. Bonded lining b. Riveted or bolted lining	ii. Brake lining is: -broken -cracked -not completely attached to the shoe or pad -contaminated with grease or oil, etc. a. The thinnest part of the lining measures less than 1/16". b. The lining is worn to less than 1/16" above any bolt or rivethead.
iii. Rotors	iii. The rotor: -is worn or machined below the minimum allowable thickness (Amended 1/23/08) -has cracks on the friction surface extending to the open edge -mounting holes are elongated -has mechanical damage other than normal wear.
iv. Drums	iv. The drum: -is worn or machined beyond the maximum allowable diameter (only if the drum has been removed) (Amended 1/23/08) -has a crack on the friction surface extending to the open edge -has a crack on the outside particularly at the drum mounting -has mechanical damage other than normal

	wear -mounting holes are elongated -friction surface is contaminated with grease, oil, etc.
v. Wheel cylinder/caliper	v. Wheel cylinder/caliper has visible leak.
vi. Master cylinder	vi. Master cylinder: -has visible leaks -is not filled to its design capacity.
C. Operation i. Components	i. Any component is seized or does not operate properly, or any non-manufactured holes or cracks are found in the spring brake housing section of a parking brake.
ii. Single brake pedal	ii. A 1954 or newer vehicle is not equipped with a single brake pedal which operates all the service brakes on that motor vehicle or combination of vehicles. (This shall not prohibit the use of an additional valve which can operate the trailer brakes independently.)
iii. Brake pedal reserve	iii. The brake pedal, when depressed under normal foot pressure: -has a reserve travel of less than 20% of its total travel; -does not hold its position for 60 seconds without dropping.
iv. Power assisted system	iv. Pedal assist is not felt when engine is started, or in vehicles with an electric backup system, pedal assist does not operate with engine off. (**NOTE**: For this test, some systems may require the ignition switch to be in the "on" position.) (Amended 12/22/99) Any leak on a vehicle equipped with a hydraulic boost system.
v. Warning device	v. A 1973 or newer truck or tractor is not equipped with either an audible or visible warning device to readily indicate to the driver a brake system or assist failure, or if on hydraulic system the brake failure light/low fluid warning light is on and/or inoperative. (Amended 1/23/08)
vi. System performance of the Power Unit (must be the last brake test	vi. The truck, tractor or bus fails to stop within 35 feet or stops with significant pull when tested from a speed of 20

done) This test must be done on a hard level surface, free from loose material (indoors or outdoors). (Amended 1/23/08)	MPH. (Amended 1/23/08)
2. Air/vacuum brake systems A. Presence i. General	A.i. There is a missing or disconnected brake on any wheel except for the following: 1980 and older trucks and tractors that have three or more factory equipped axles in some cases may not have brakes on the front axle. These vehicles should not be rejected unless there is evidence that front brakes ever existed (i.e. drum(s), rotor(s), or backing plate assemblies are present). There is insufficient vacuum reserve to permit one full brake application after engine is shut off. (Added 1/23/08)
ii. Warning systems	ii. The vehicle is not equipped with either an audible or visible warning device, OTHER THAN THE GAUGE, to readily indicate to the driver a system failure.
iii. Gauge	iii. The gauge is missing or defective.
B. Condition i. Tanks, hoses, lines and connections, etc.	i. Any brake component is: -cracked -broken -crimped -swelled or swollen -not securely fastened -charred or chafed -in contact with the exhaust system or driveline.
ii. Brake lining (all measurements must be taken from shoe/pad or top of the rivet/bolt)	ii. Brake lining is: -broken -cracked -not completely attached to the shoe or pad -contaminated with grease, oil, etc.
a. Bonded lining (on a brakeshoe or pad)	a. The thinnest part of the lining measures less than 1/4" at the center of the shoe (only if a drum has been removed).
b. Riveted or bolted lining (pads and shoes)	b. The lining is worn to less than 1/16" above any bolt or rivet head (only when the lining or pad is required to be measured).

c. Air disc brake pads	c. The lining is worn to less than 1/8”.
iii. Rotors	iii. The rotor: - is worn or machined below the minimum allowable thickness; (Amended 1/23/08) - has cracks on the friction surface extending to the open edge; - mounting holes are elongated; - has mechanical damage other than normal wear.
iv. Drums	iv. The drum: - is worn or machined beyond the maximum allowable diameter (only if a drum has been removed); (Amended 1/23/08) - has a crack on the friction surface extending to the open edge; - has a crack on the outside, particularly at the drum mounting; - has mechanical damage other than normal wear; - mounting holes are elongated; - friction surface is contaminated with grease, oil, etc.
C. Operation i. Components	i. Any component is seized or does not operate properly or any non-manufactured holes or cracks are found in the spring brake housing section of a parking brake. (Amended 1/23/08)
ii. Single brake pedal	ii. A 1954 or newer model vehicle is not equipped with a single brake pedal which operates all the service brakes on that motor vehicle or combination of vehicles. (This shall not prohibit the use of an additional valve which can operate the trailer brakes independently.)
iii. Storage tank drain	iii. Drain cock cannot be opened or is plugged (when checking, drain liquids and other foreign substances).
iv. Warning devices	iv. The warning device does not provide a continuous warning once activated.

a. Vacuum warning device TEST: run engine to build full vacuum	a. With engine off: The warning system does not activate whenever the vacuum reserve is reduced to less than 8 inches of mercury. (Do this by applying the brakes.)
b. Air Warning Device	b. With engine off: The warning system does not activate when the pressure drops below 60 PSI or manufacturer's specification, if known. (Do this by applying the brakes.)
v. Air brake leakage test The following four conditions must be met before performing this test. System pressure must be reduced or increased to 80 PSI either by applying the brakes or building up pressure. - governor is cut-in, - engine is at idle, - reservoir pressure is between 80-90 PSI, - service brakes are fully applied.	
a. With engine running and service brakes applied determine if system can maintain at least 80 PSI.	a. The system does not maintain at least 80 PSI. (Perform this test for 1 minute on single and/or combination vehicles.)
vi. Air pressure safety relief valve governor cut out and compressor drive belts	vi. Air pressure safety relief valve is not present or does not operate on a system which can be checked. (Some valves designed with a lead plug cannot be tested.) Brake system operating pressure exceeds 135 PSI. Compressor drive belt(s) is missing, badly worn, frayed, slipping or loose, or bolts, pulleys, brackets, braces or adapters are cracked, broken, loose or missing. (Amended 1/23/08)
vii. Inverting relay spring brake control valve or inversion valve (on vehicles so equipped)	vii. Valve fails to function properly.

viii. Air brake adjustment Equipment: Steel scale and feeler gauge or equivalent. a. On vehicles equipped with Cam brakes, mark each brake chamber pushrod at the face of the brake chamber with the brakes released. Apply the air brakes fully with reservoir pressure at 100 PSI or delivery pressure between 80-90 PSI, and measure the distance the push rod length travels from the face of the chamber to the mark previously made when the brakes were released (see Appendix III, Figure 1). Compare this measurement to those in the push-rod stroke table (see Appendix I, Table A).	a. Cam brakes, push-rod travel of any chamber exceeds the maximum stroke listed in Table A (see Appendix I). There is a mismatch on any axle of: 1. Air chamber size 2. Slack adjustor
b. On vehicles equipped with wedge brakes, remove the inspection hole cover at each dust shield and with the brakes released, scribe a line on the edge of the brake lining. Apply the air brakes fully with reservoir pressure at pressure between 80 and 90 PSI. Measure the distances the brake lining travels (see Appendix IV, Figure 2).	b. Any brake shoe has more than 1/16" travel.
c. On vehicles equipped with disc brakes use Table B (see Appendix II).	c. Push rod travel of any chamber exceeds the maximum stroke listed in Table B (see Appendix II).
1. System performance of the power unit (must be the last brake test done). This test must be done on a hard level surface, free from loose material (indoors or outdoors). (Amended 1/23/08)	1. The truck, tractor or bus fails to stop within 35 feet or stops with significant pull when tested from a speed of 20 MPH.

(o) *Parking brake systems* (Amended 1/23/08)

Inspect for:	**Reject if:**
1. Parking Brake	
NOTE 6: On 1962 and older vehicles not originally equipped with a parking brake, disregard this section.	
A. Presence	A. The vehicle is not equipped with a parking brake.
B. Condition of the parking brake components	B. Any of the following are missing or defective: -cotter pins; -retracting springs; -worn rods or couplings; -cable(s) are visibly frayed or frozen. The ratchet, pawl, lever control, or other locking device does not hold the brake in the applied position or cannot be properly operated or released. Any non-manufactured holes or cracks are found in the spring brake housing section of a parking brake. (Added 1/23/08)
C. Operation	C. The parking brake does not operate separate from the service brakes. -Failure of either system leaves the vehicle without brakes. -There is no reserve travel in the lever or pedal when the brake is fully applied. -The control is not within easy reach of the driver. -The parking brake does not hold the vehicle stationary with transmission in low gear (whether automatic or manual) with moderate engine power applied.
2. Emergency breakaway systems A. Presence i. Trailers ii. Towing vehicles manufactured after 1953.	i. The trailer is not equipped with an emergency breakaway system. ii. The vehicle is not equipped with an automatic breakaway system (tractor protection valve so that the service brakes on the towing vehicle remain operational if the trailer separates. Where manual operation is permitted, this control shall be within easy reach of the driver.

B. Operation i. All trailers (air, vacuum, or electric) ii. Towing vehicles. The test must be conducted with a fully charged system.	i. Trailer is not equipped with an emergency system which automatically applies the brakes upon separation from the towing vehicle and stays applied for a minimum of 15 minutes. Trailer with batteries that cannot be recharged must only be capable of making a brake application. The 15 minutes will be waived.
SINGLE AIR BRAKE SYSTEMS (Pre-FMVSS 121 Brake Systems) Manually operate the dash control valve (tractor protection control valve).	The trailer emergency brake system cannot be applied and released with this valve.
DUAL AIR BRAKE SYSTEMS (FMVSS 121 Systems) Manually operate the tractor protection control valve (normally marked "trailer supply valve").	The trailer brakes do not apply and release as knob is pulled out and pushed in.
Manually operate park control valve	All parking brakes do not apply and release as knob is pulled out and pushed in.

(p) *Seat belts*

Inspect for:	**Reject if:**
1. Presence	1. A 1965 or newer vehicle is not equipped with a seat belt at the driver seat and the right front outboard seat. A 1971 or newer vehicle is not equipped with a seat belt at each seating position, except that a bus needs to be equipped with a seat belt at least at the driver seat.
2. Operation	2. Any seat belt: -cannot be buckled or unbuckled; -can be pulled out of its anchors or was not anchored at the start of the inspection; -comes unbuckled when tugged upon; -has an automatic adjuster which does not operate properly.

(q) *Fuel Leaks* (Amended 1/23/08)

Procedure:	**Reject if:**
1. Check the fuel system for leaks, including the fuel tank and lines and auxiliary heating or refrigeration units. (Amended 1/23/08)	1. Any leak is found in any fuel system, tank or lines to such a degree as to cause dripping or pooling of fuel. (Amended 1/23/08) A fuel tank is not securely attached to the vehicle. (Added 1/23/08) **NOTE:** Some fuel tanks use spring or rubber bushings to permit movement. (Added 1/23/08)
Compressed Natural Gas (CNG), Liquefied Petroleum Gas (LPG) or Liquefied Natural Gas (LNG) fuel systems (Added 1/23/08)	Any leakage from the CNG, LPG or LNG system detected audibly, visually or by smell. (Added 1/23/08)
NOTE 7: Some brief fuel leakage, water vapor at the fittings, or decompression may occur during refueling, causing temporary frosting of CNG or LPG fuel system parts. If the vehicle has been refueled shortly before inspection, care must be taken to distinguish these temporary frosting occurrences from actual leaks. Also, in hot weather some condensation on the system is normal. (Added 1/23/08)	

APPENDIX I

CAM BRAKES - PUSH-ROD TRAVEL LIMITS

TABLE A

(Dimensions in inches)

Type	Effective Area (Sq. In.)	Outside Diameter* Inches	Maximum Stroke Inches
BOLT TYPE BRAKE CHAMBER DATA			
A	12	6 15/16	1 3/8
B	24	9 3/16	1 3/4
C	16	8 1/16	1 3/4
D	6	5 1/4	1 1/4
E	9	6 3/16	1 3/8
F	36	11	2 1/4
G	30	9 7/8	2
ROTOCHAMBER DATA			
9	9	4 9/32	1 1/2
12	12	4 13/16	1 1/2
16	16	5 13/32	1 7/8
20	20	5 15/16	1 7/8
24	24	6 13/32	1 7/8
30	30	7 1/16	2 1/4
36	36	7 5/8	2 5/8
50	50	8 7/8	3
CLAMP TYPE BRAKE CHAMBER DATA			
6	6	4 1/2	1 1/4
9	9	5 1/4	1 3/8
12	12	5 11/16	1 3/8
16	16	6 3/8	1 3/4
20	20	6 25/32	1 3/4
24	24	7 7/32	1 3/4
30	30	8 3/32	2
36	36	9	2 1/4

*Dimensions listed do not include capscrew head projections for rotochambers and bolt clamp projections for clamp type brake chambers.

BENDIX WESTINGHOUSE			
DD2			2
DD3			2

CAM BRAKES - PUSH ROD TRAVEL LIMITS

APPENDIX II

DISC BRAKES - PUSH-ROD TRAVEL LIMITS

TABLE B

(Dimensions in Inches)

Type	Effective Area (Sq. In.)	Outside Diameter Inches	Maximum Stroke Inches
12	12	4 13/16	1 5/8
16	16	5 13/32	1 7/8
20	20	5 15/16	2
24	24	6 13/32	2 1/8
30	30	7 1/16	2 1/4

DISC BRAKES - PUSH-ROD TRAVEL LIMITS

APPENDIX III

MEASURING THE CAM BRAKE ADJUSTMENT

FIGURE 1

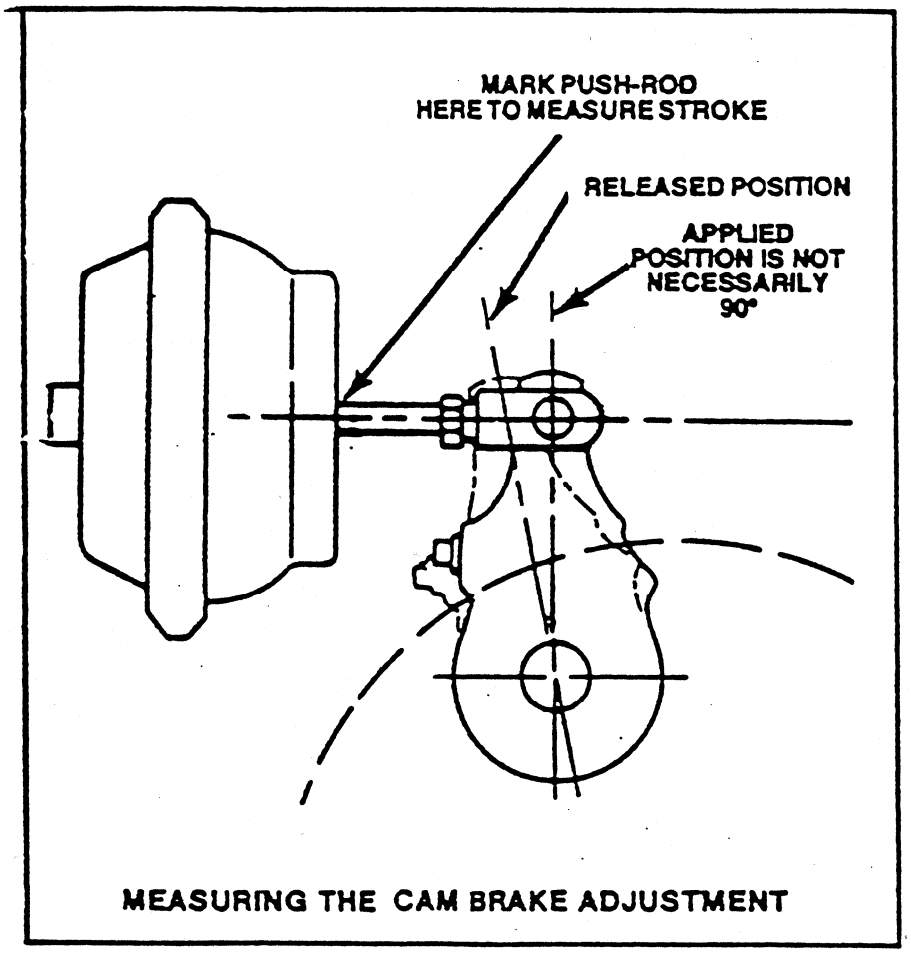

MEASURING THE CAM BRAKE ADJUSTMENT

APPENDIX IV

MEASURING THE WEDGE BRAKE ADJUSTMENT

FIGURE 2

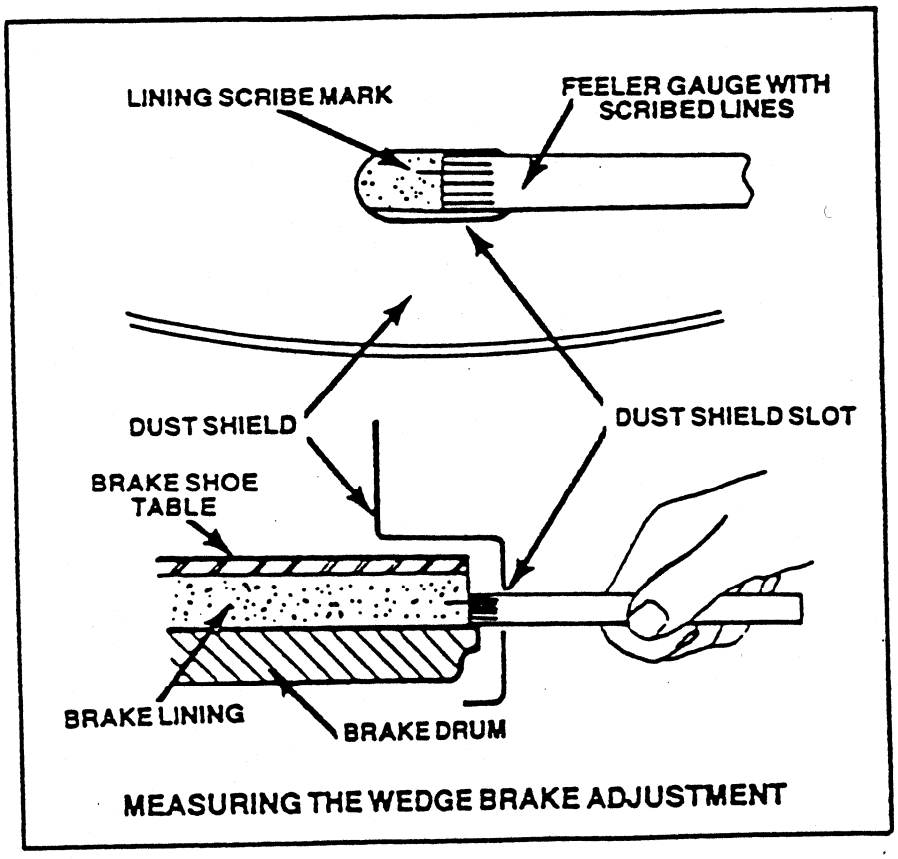

MEASURING THE WEDGE BRAKE ADJUSTMENT

§79.28 Inspection of motorcycles.

This section is comprised of the safety inspection requirements for motorcycles.

(a) *Brakes*

Inspect for:	**Reject if:**
1. Check braking system for required brakes.	1. Not equipped with front and rear brakes (1970 and older need only one operating brake); any brake is disconnected.
2. Road test.	2. Vehicle does not stop within 25 feet when brakes are applied at 20 mph on a hard, dry, level surface free of loose material.
NOTE: If a road test is performed on public roadways, a properly licensed operator must perform the test. If a road test cannot be performed, pull at least one wheel on a drum brake system for inspection of the condition of brake linings, drum and wheel cylinders, if vehicle is so equipped. On a disc brake system, visually check rotors, pads and calipers.	
3. Drum brakes: visually inspect shoes, drum and hardware.	3. Riveted lining is worn to less than 1/32" over the rivets or to less than 1/16" on bonded linings; drums are scored and impair braking, or linings are contaminated; drums are turned below manufacturer's specifications.
4. Disc brakes: visually check pads and rotors.	4. Brake pads are worn to metal; rotor has mechanical damage other than normal wear; rotors are cracked or turned below minimum specifications.
5. Check mechanical brakes, linkage hardware and operation.	5. Rods, springs, and other hardware are bent, cracked, broken, missing, frozen, or improperly connected or adjusted.
6. Check foot and hand lever free play and reserve.	6. Foot pedal does not have at least ½" free play or manufacturer's specification, whichever is less. Hand brake does not have at least 1/4" free play or manufacturer's specification, whichever is less. Pedal reserve is less than 1/3 of the possible travel or less than the manufacturer's specification. (Amended 8/13/03)
7. Check hydraulic brake lines, master cylinder, wheel cylinder/calipers.	7. Lines or hoses are bent, cracked, abraded, crimped, restricted, or leaking. Master cylinder, calipers or wheel cylinders leak or control rod is improperly adjusted. Fluid level is below full mark.
8. Hydraulic brake pedal drop.	8. Pedal or hand control moves or drops in one minute while normal pressure is applied.

(b) *Steering suspension and frame* (Amended 1/23/08)

Inspect for:	**Reject if:**
1. Check frame.	1. Bent, broken or cracked and is considered to be a hazard for operation.
2. Check wheels/wheel bearings.	2. Bearings are loose, broken, out of adjustment. Spokes or rims are out of alignment or broken.
3. Check steering head and bearings.	3. Loose, broken, out of adjustment or modified beyond manufacturer's specifications.
4. Check handlebars.	4. Loose, bent, broken, cracked or damaged, affecting proper steering; equipped with bicycle handlebars. The handlebars or grips are higher than the operator's shoulders. (Amended 1/23/08)
5. Check shock absorbers.	5. Broken, defective, do not operate properly.

(c) *Exhaust system and muffler (does not apply to electric motorcycles)*

Inspect for:	**Reject if:**
1. Check exhaust system and muffler.	1. System or elements are not securely fastened. Not equipped with an adequate exhaust system and muffler to prevent excessive noise. Equipped with cut-outs, bypass or any device which allows excessive noise. Equipped with a replacement exhaust system or components that are not equivalent to original. Diffusers or resonators or any internal muffler parts are removed.

(d) *Headlamp* (Amended 1/23/08)

Inspect for:	**Reject if:**
1. Check presence/condition. **NOTE**: Certain motorcycles may have a headlamp system that "modulates" between high and low intensity. This is an allowed modification only if the system can be switched off for normal operation. (Added 1/23/08)	1. Not equipped with at least one approved, operating motorcycle headlamp. Lamp is not operational; not properly and securely mounted, lens is cracked, broken, covered, discolored or obstructed (such as shields, paint, etc.). Light is not white or does not operate properly in all switching positions. Lights do not have high and low beams.

(e) *Other lights* (Amended 1/23/08)

Inspect for:	**Reject if:**
1. Check tail, number plate, stop and turn signal lights, and reflectors. **NOTE**: No lighting other than the headlamp(s) referenced in (d) may be modulated; they must emit steady light. (Added 1/23/08)	1. Vehicle is not equipped with at least one tail and number plate light. If manufactured after October 1, 1968, one stop lamp. August 1985 and newer motorcycles must have turn signals. Does not have at least one Class B red reflector on rear (may be part of light lens).
NOTE: If any motorcycle was originally equipped with more than one of each of the required lights, or such lights have been added when not required, all lights must meet the inspection criteria. A combination tail, stop, and number plate light may be used.	
2. Check condition and operation.	2. Tail lamp does not provide light visible for at least 300 feet from rear. Number plate is not visible for 50 feet from the rear. Tail/stop light lenses do not produce majority of red light (red to amber for stop lamp). Signal lights other than red or amber on rear, white or amber on front. Lens is broken, missing, obstructed, discolored or fits improperly. Lamps are not securely mounted; do not produce a steady light; do not work properly in all switching positions (switched on/off, brakes applied, etc.).

(f) *Tires*

Inspect for:	**Reject if:**
1. Tread measurement. Tread depth gauge calibrated in 1/32 of an inch must be used if tread depth is expected to fail. Readings must be taken in major tread groove nearest the center at two points of the circumferences not closer than 15 inches. (Do not inspect spare tire.)	1. Less than 2/32 of an inch of tread remains at both points where readings are taken. (If flat spots exist, start check at this spot.)
2. Check other tire condition.	2. Any cut in excess of one inch that is deep enough to reach the body cords. Tire is temporarily repaired, using a blowout patch or boots. Tire has bumps, bulges or knots showing partial failure of the tire structure. Tire has exposed ply or cord structure exposed. Tire does not display appropriate Department of Transportation markings or indicates "for off-road use," "racing use only," or similar wording.

3. Tire pressure (Added 9/1/04) Check tire pressure.	3. Advise customer if tire pressure is not within range recommended by vehicle manufacturer. (Added 9/1/04) **NOTE:** Tire pressure check is an advisory only; do not reject the vehicle. The customer must be notified in writing. (Added 9/1/04)

(g) *Horn*

Inspect for:	**Reject if:**
1. Required.	1. Not equipped with a horn.
2. Check condition.	2. Not securely mounted; button or activator interferes with brakes or other mechanism. Sound is not audible at 200 feet under normal conditions. Sound is loud or harsh, horn control/activator does not work properly. Vehicle is equipped with gong or siren whistle (only allowed or authorized on emergency vehicle).

(h) *Rear view mirror*

Inspect for:	**Reject if:**
1. Required.	1. Not equipped with at least one rear view mirror that provides a clear view to the rear.
2. Condition.	2. Not securely mounted. Reflector is deteriorated, peeling, tarnished, broken or cracked.

§ 79.29 Appendix A (Added 1/23/08)

TABLE A

CLAMP TYPE BRAKE CHAMBER DATA

TYPE	OUTSIDE DIAMETER		BRAKE ADJUSTMENT LIMIT	
	in.	mm.	in.	mm.
6	4-1/2	(114)	1-1/4	(32)
9	5-1/4	(133)	1-3/8	(35)
12	5-11/16	(145)	1-3/8	(35)
16	6-3/8	(162)	1-3/4	(45)
20	6-25/32	(172)	1-3/4	(45)
24	7-7/32	(184)	1-3/4	(45)
30	8-3/32	(206)	2	(51)
36	9	(229)	2-1/4	(57)

LONG STROKE CLAMP TYPE BRAKE CHAMBER DATA

TYPE	OUTSIDE DIAMETER		BRAKE ADJUSTMENT LIMIT	
	in.	mm.	in.	mm.
12	5-11/16	(145)	1-3/4	(35)
16	6-3/8	(162)	2	(45)
20	6-25/32	(172)	2	(45)
24	7-7/32	(184)	2	(45)
24*	7-7/32	(184)	2-1/2	(45)
30	8-3/32	(206)	2-1/2	(51)

*For 3 inch maximum stroke type 24 chambers.

NOTE: A brake found at the adjustment limit is not a violation.

BOLT TYPE BRAKE CHAMBER DATA

TYPE	OUTSIDE DIAMETER		BRAKE ADJUSTMENT LIMIT	
	in.	mm.	in.	mm.
A	6-15/16	(176)	1-3/8	(35)
B	9-3/16	(234)	1-3/4	(45)
C	8-1/16	(205)	1-3/4	(45)
D	5-1/4	(133)	1-1/4	(32)
E	6-3/16	(157)	1-3/8	(35)
F	11	(279)	2-1/4	(57)
G	9-7/8	(251)	2	(51)

NOTE: A brake found at the adjustment limit is not a violation.

ROTOCHAMBER DATA

TYPE	OUTSIDE DIAMETER		BRAKE ADJUSTMENT LIMIT	
	in.	mm.	in.	mm..
9	4-9/32	(109)	1-1/2	(38)
12	4-13/16	(122)	1-1/2	(38)
16	5-13/32	(138)	2	(51)
20	5-15/16	(151)	2	(51)
24	6-13/32	(163)	2	(51)
30	7-1/16	(180)	2-1/4	(57)
36	7-5/8	(194)	2-3/4	(70)
50	8-7/8	(226)	3	(76)

NOTE: A brake found at the adjustment limit is not a violation.

DD2 &DD-3 BRAKE CHAMBER DATA

TYPE	OUTSIDE DIAMETER		BRAKE ADJUSTMENT LIMIT	
30	8-1/8 in.	(206mm)	2-1/4 in.	(57mm)

NOTE: This chamber has three air lines and is found on motor coaches.

NOTE: A brake found at the adjustment limit is not a violation.

WEDGE BRAKE DATA

The combined movement of both shoe lining scribe marks shall not exceed 1/8 inch (3.18mm).

§ 79.30 ***Repealed.***